STATE OF NEW JERSEY
SCHOOLS DEVELOPMENT AUTHORITY
1 WEST STATE STREET
P.O. BOX 991
TRENTON, NJ 08625-0991
609-943-5955

Addendum # 2

NJSDA
1 West State Street
Trenton, NJ 08625
Phone: 609-943-5955
Fax: 609-656-4642

Date: **March 28, 2013**

PROJECT #: **PA-0006-C04**

DESCRIPTION: **New Marshall Street Elementary School**

This addendum shall be considered part of the Bid Documents issued in connection with the referenced project. Should information conflict with the Bid Documents, this Addendum shall supercede the relevant information in the Bid Documents.

A. CHANGES TO THE PROCUREMENT PROCESS

1. Modifications to the Request for Proposals

a. **REVISE:** The Authority has determined to modify the scoring ratio of price compared to all "other factors" from a ratio of 90% price to 10% "other factors", in favor of a ratio of 80% price to 20% "other factors." Accordingly, the following changes reflected in sections b through d, below, shall reflect this modification.

b. **REVISE:** The second paragraph of Section 1.3 of the RFP ("Basis of Award") shall be revised as follows (additions in **bold and underlined** text; deletions in ~~*strikethrough and italics*~~):

> Price shall be considered significantly more important than all other factors combined, with price representing ~~*90%*~~ **80%** of the weighted scoring and all other factors representing ~~*10%*~~ **20%** of weighted scoring. The Authority reserves the right to accept other than the lowest price proposal, or reject all proposals.

c. **REVISE:** The first paragraph of Section 1.5 of the RFP ("Evaluation and Scoring Process") shall be revised as follows (additions in **bold and underlined** text; deletions in ~~*strikethrough and italics*~~):

For this procurement, price shall be weighted as significantly more important than all other factors, with price equaling ~~*90%*~~ **80%** of the overall weight, and all non-price factors having a combined weight of ~~*10%*~~ **20%**.

d. **REVISE:** The first paragraph after the "CALCULATING PRICE POINTS" table included in Section 1.5 of the RFP ("Evaluation and Scoring Process") shall be revised as follows (additions in **bold and underlined** text; deletions in ~~*strikethrough and italics*~~):

Before being combined with the non-price scores, the price scores for all bidders will be adjusted by a weighting factor of ~~*90%*~~ **80%** , and the scores for the non-price "other factors" criteria will be adjusted by a ~~*10%*~~ **20%** weighting factor.

e. **REVISE:** Section 3.9 of the RFP ("Interview") shall be revised as follows (additions in **bold and underlined** text; deletions in ~~*strikethrough and italics*~~):

The Authority ~~*may choose*~~ **has determined** to perform interviews with all Bidders, to be **scheduled and** conducted after technical submissions have been received. The interviews will allow bidders to clarify information provided in their submissions, and will allow for selection committee members to ask questions about the technical submissions. The interviews will not be scored separately. ~~*Information regarding the scheduling of interviews will follow in a subsequently-issued addendum.*~~

B. CHANGES TO THE PROJECT MANUAL:

1. Revisions to the Specifications

a. **REVISE:** Specifications, Division 1, Section 01010 – Summary of Work, Section 1.4.– ALLOWANCE, D.1, shall be revised as follows (additions in **bold and underlined** text; deletions in ~~*strikethrough and italics*~~):

1. Excavation, stockpiling and loading for off-site disposal of all old partial concrete foundations, concrete, and rubble is part of this contract. The Contractor shall include in the lump sum bid the transportation and proper off-site disposal of 50 tons of such material from the areas shown on the ~~*January 23, 2013 Existing Conditions Survey*~~ **Drawing C-2, Existing Conditions.** Any unused portions of the identified quantity will be credited back to the Owner using the unit prices listed in the price proposal. Transportation and proper off-site disposal of partial concrete foundations, concrete and rubble in excess of the 50 tons included in the base bid will be covered under this allowance using the unit prices established in the price proposal.

b. **REPLACE:**

The following Specification Sections issued with the original bid documents should be deleted in their entirety and replaced with the revised Specification Sections of the same names, issued herewith as Attachment 2.1.

a. Specifications, Division 10, SECTION 10210 – WALL LOUVERS

C. BIDDER QUESTIONS AND NJSDA RESPONSES:

1. Question: **The project procurement requirements require the bidder to list any additional subcontractors if the bidder intends to contract in the trade or other trades applicable to this branch, please confirm that the bidder's named subcontractors are not required to list or name any sub-subcontractors that they listed subcontractor intends to sub-subcontract work from the trade or the branch to?**

Answer: Confirmed. Neither the bidder, nor the bidder's named subcontractors are required to list or name any sub-subcontractors. As noted in Item A.1.g of Addendum #1, which modified Section 4.2.2 of the RFP,

> When naming subcontractors in accordance with this section, a bidder is required to name only those subcontractors that are engaged directly by the Bidder ("first-tier subcontractors"). Bidders are NOT REQUIRED to name any subcontractors engaged by the first-tier subcontractors or by others (e.g., "second-tier subcontractors" or "third-tier subcontractors.")

2. Question: **Under section 1 procurement review item 1.1A, the listed steel quantity is 49 tons, we believe that value is not accurate considering the school proposed square footage, please advise?**

Answer: The correct Steel quantity is 490 tons.

3. Question: **Under section 1 procurement review item 1.1A, it requires the bidder to undertake a prebid review and inspection of the existing steel materials to determine the suitability and fitness of materials, etc., and the procurement section 1.1B indicate that the SDA has determined that the bidder should identify and subcontract the remaining fabrication and erection of the structural steel for $ 1,378,000, how can the SDA require that the bidder be responsible for verifying the steel conditions and at the mean time the SDA already decided the value of completing the work and request the bidders to carry on that cost, would not be only reasonable to figure that the entity who estimated the value of completing the work and determined a value of $ 1,378,000 includes the responsibility of the steel conditions and associated repairs if needed be? Please revise the specification to a reasonable expectation of the bidders, an allowance can be allocated by the SDA to deal with any unforeseen if needed be since that risk cannot be calculated by the bidders at the present time.**

Answer: The bid documents for this Project require that bidders for this Project identify and subcontract with Haberle Steel to complete the fabrication and to perform the erection and installation of the structural steel for this Project. Haberle Steel was the original supplier and fabricator of structural steel under a prior construction contract for the Marshall Street Project. NJSDA has decided to utilize the previously purchased, and partially fabricated, structural steel (the "Existing Steel") as part of the requirements for this Project. NJSDA has negotiated with Haberle Steel a package price of $1,378,000 for completion of the fabrication and the erection of the Existing Steel.

The $1,378,000 package price is a baseline cost for completion of the unperformed fabrication and the erection of the Existing Steel, and is premised upon an assumption that the existing steel is suitable for use on the Project. The bidders should undertake the required prebid inspection of the Existing Steel and include in their bids the cost of any corrective work or reconditioning of the Existing Steel that may be needed to make the Existing Steel suitable for use on the Project. No allowance will be provided.

4. Question: **Please confirm that the listed $ 1,378,000 includes all the steel decking and joists and all the structural steel elements required to accomplish the project completion and no other values should be included in the bidder's estimate.**

Answer: Structural Steel, Joist, Deck, Field Bolts, and Erection are included in the prenegotiated price.

5. Question: **Please confirm that the SDA already obtained all the required paperwork from Haberle steel and no paperwork need to be listed in the bidder's package for the steel trade since Haberle is a preselected subcontractor by the SDA, if the paperwork still need to be listed by the bidder, please provide the paperwork through the SDA to avoid any conflicts since again Haberle is the SDA's choice.**

Answer: No paperwork is required.

6. Question: **Please confirm that the bidder can choose to obtain the steel from Haberle and hire a different subcontractor to complete the work if the bidder can secure the work completion cheaper than the $ 1,378,000 which will be included in the bidder's overall bid, if not, please provide a legal backup to the rejection since under competitive public bidding regulation, the tax payers are entitled to the most economic qualified bids. Please confirm that the steel materials already procured by the SDA is available to pick up after the award if the bidder find other qualified bidders to complete the work as described herein.**

Answer: No. Bidders are required by the bid documents to engage Haberle Steel for completion of the fabrication and for the erection of the structural steel for this Project. NJSDA has determined that a sole-source procurement of steel fabrication and erection is protective of the interests of the Authority and the public with respect to optimal reutilization of materials previously purchased and procured from, and work previously performed and supplied by, that same vendor under the prior construction contract for the Marshall Street School Project. To that end, NJSDA has negotiated with Haberle Steel a package price for completion of the fabrication and the erection of the Existing Steel. The transport and delivery of the finished structural steel to the job site by Haberle Steel is anticipated and included as part of that negotiated steel package price.

7. Question: **Please confirm that Haberle will comply with the bidder's schedule to complete the project as per the specification requirement or sooner as decided by the bidder regarding the steel delivery and erection.**

Answer: Haberle Steel has agreed to comply with the successful bidder's schedule.

8. Question: **Please advise who will be the steel erector if Haberle decide to hire a sub-subcontractor.**

Answer: Kenvil United Corp, AISC Certified Steel Erector

9. Question: **Please revise the 1.1B requirement last paragraph regarding steel storage charges after the bid date since if Haberle is the fabricator and erector for the $ 1,378,000, reasonable storage charges should already be included in that cost since it is not common at all that the steel subcontractor gets paid for storage charges while fabricating the project, normally if the steel is fabricated and not erected for months then storage charges apply.**

Answer: Steel storage has been paid for by the NJSDA. No additional charges are expected at this time.

10. Question: **Can the constructability review duration be reduced to avoid starting the project in the winter months?**

Answer: No modification to the constructability schedule will be made.

11. Question: **Please confirm that the new project documents have been approved by DCA? Please advise if the bidder can utilize the already issued permits and submit to DCA new jackets for permit update only?**

Answer: The revised documents are under DCA review.
The bidders are required upon award to apply for the permits from DCA.

12. Question: **Please advise the anticipated award date from the bid submission date?**

Answer: The NJSDA anticipates the award of this contract to be made by June 2013 with the constructability NTP anticipated by June 2013 and construction NTP made by Sept 2013

13. Question: **Please advise who is the Construction management firm selected by the SDA for the project.**

Answer: SDA is currently procuring a Construction Management Firm and to be determined in next few months.

14. Question: **Please confirm the project is not a LEED project especially after removing the geothermal wells from the project.**

Answer: Though the project is not to be submitted to the USGBC, the work shall be performed in accordance with Sustainable Project Requirements included in appendix.

15. Question: **Allowance D item 1 describes that removing and disposing of ALL the old partial concrete foundations, concrete and rubble is allowance work, while the structural drawings that the existing foundation and rebar, etc could be reused after the rust is removed; please advise which one is to include in our bid? The installed concrete foundations have been exposed to 3 winters and all the rebar is rusted and if any need to utilized, the engineer of record must certify acceptance of the work in place and exact quantity and method of rebar cleaning should be provided to be estimated? If the allowance description is more accurate than the structural drawings and in fact all the installed work must be removed and disposed of site, please confirm that the allowance would then also include all the subgrade preparation including excavation of unacceptable subgrade, replacement of removed materials, removal and disposal of all installed concrete**

and associated rebar, etc since the subgrade conditions is not accessible for verification?

Answer: The Allowance addresses debris found on site and does not reference the previously installed foundations. The contract is to follow the structural drawings and direction indicated.

16. Question: **Please confirm that the installed concrete retaining wall along the railroad side that have been installed for at least 6 years by the SDA is acceptable to the engineer of record?**

Answer: The NJSDA has determined that the wall as installed is acceptable and the contractor must follow contract documents as to completing the wall.

17. Question: **Please confirm that the CAD files will be made available to the contractor at no cost?**

Answer: CAD drawings will be provided at no cost to the successful bidder upon Construction NTP, if required and requested by the General Contractor.

18. Question: **Neither geotechnical nor environmental reports showing interpretation, recommendations and conclusion were attached to the bid documents representing the new borings performed by Maser and environmental testing by Test America, only April 12th, 2012 report was included from Maser but doesn't address the boring or Test America reports, please provide?**

Answer: Appendix A – Subsurface Exploration Data provided in the Bid documents includes the geotechnical and environmental boring data.

19. Question: **The site drawings show the transformer pad being built by the contractor, from prior experience dealing with PSEG, they mandate providing their own pads for contractor's installation, please advise?**

Answer: Contractor is to follow contract documents.

20. Question: **Please confirm all permanent utilities fees' are by the SDA or Paterson BOE, if not, please provide allowance since it is impossible for the contractor to get those estimate from the utility companies.**

Answer: NJSDA will pay the utilities connection fees once invoice presented by utility companies.

21. Question: **Please advise the intent of having the "Tenax Beacon Plus Safety Fence" shown on details drawing C-15?**

Answer: The Tenax Beacon Plus Safety Fence is a visible demarcation barrier required by NJDEP that is part of the engineering controls for the site's environmental capping design. This is discussed in the Project description within the site specifications Section 02000 item 3.0.

22. Question: **The specification calls for a "snap locking" panel. The majority of the project is large radius curved panels. You cannot curve a snaplok style panel. As a panel manufacturer I am recommending that you issue an addendum based on a**

mechanically fastened T-Panel, i.e. Imetco Series 300. This system will also provide you with 80'+ panel lengths therefore avoiding any lap joints on the roof. You should also require that the manufacturer provide a 25 year NDL, or No Dollar Limit, warranty and a 25 year finish warranty. This metal panel system from Imetco is the highest performing metal roof system on the market. For a full listing of projects in the Northeast, please don't hesitate to reach out.

Answer: Imetco is an acceptable substitution.

23. Question: **The Price Proposal form shows no reference to the cost allowances and the unit prices referenced by Specification Section 01010-Summary of Work.**

Answer: No unit prices are required. As specified in the price proposal form, section E, item number 3, the bidder must include the price of allowances listed in the Specifications and/or by Addenda (um) in the Base Bid Price.

24. Question: **Please confirm that all work associated with the removal and disposal of impacted or contaminated materials, as referenced by Specification Section 02250-Excavation, Handling and Removal of Impacted Materials and Specification Section 02260-Waste Disposal Requirements, is work to be performed upon authorization as described by Cost Allowance D and is not to be included in the Base Bid price.**

Answer: All work associated with the removal and disposal of excess materials which cannot be utilized under the engineering cap, as referenced by Specification Section 02250-Excavation, Handling and Removal of Impacted Materials and Specification Section 02260-Waste Disposal Requirements is Base Bid work. All material excavated during the installation of any on-site utility system shall be removed from the site and replaced with certified clean fill material as part of the Base Bid.

25. Question: **Please confirm that the work associated with the excavation to approved subgrade and compacted fill as shown by Drawing S-4 in the detail entitled "Existing Footing Bearing Capacity Remediation Detail" is work to be performed upon authorization as described by Cost Allowance D and is not to be included in the Base Bid price.**

Answer: All work associated with the excavation to approved subgrade and compacted fill as shown by Drawing S-4 in the detail entitled "Existing Footing Bearing Capacity Remediation Detail" is Base Bid work. Cost Allowance D shall be utilized if old partial concrete foundations, concrete, and rubble are encountered in excess of the 50 tons of material from the areas shown on the Drawing C-2, Existing Conditions. This work is unrelated to the work necessary to remediate existing school footers in need of bearing capacity remediation.

26. Question: **The project specification manual appears to be missing Specification Sections 07135 and 07140 as referenced by the waterproofing notes shown by Architectural Drawing A-0.7.**

Answer: Liquid Boot will act as the vapor barrier. Disregard references to Sections 07135 & 07140 as discussed on the waterproofing notes on drawing A-0.7

27. Question: **Furnish structural details showing the relationship of the fiberglass sewage ejector basin shown by Plumbing Detail No. 2/P-3 to the Basement floor slab, including the means of terminating the liquid boot and/or integrally bonded**

sheet membrane below the slab to the ejector; and confirm whether any concrete antiflotation encasement is required at the sewage ejector basin, and if so, furnish details for same.

Answer: The ejector is not designed to be within a concrete pit. It is specified with an anti-flotation ring and is to be installed per manufacturer's instructions. Coordinate Liquid Boot termination with liquid boot manufacturer.

28. Question: **Specification Section 03300, paragraph 2.4 E, refers to a requirement for a vapor barrier under all slab on grade, the waterproofing notes shown by Architectural Drawing A-0.7 refer to a requirement for a pre-applied integrally bonded sheet membrane to the blind side of the entire Basement slab and elevator pit as specified by Section 07135, and Specification Section 02989-Passive Remedial System refers to a requirement for a liquid boot membrane. Please furnish a typical slab on grade sub base detail showing the interrelationship between these different barriers.**

Answer: Liquid Boot will act as the vapor barrier. Disregard references to Sections 07135 & 07140 as discussed on the waterproofing notes on drawing A-0.7

29. Question: **Furnish structural details for the concrete features at the acid neutralization tank as referenced by Plumbing Detail No. 8/P-12.**

Answer: Concrete features to be built per information provided on the P-12 drawing. Concrete strength for the acid tank to be the same as the grease interceptor (3000 psi). Rebar is not required. The contractor to also follow the tank manufacturer's installation instructions.

30. Question: **Furnish structural details for the concrete features at the grease interceptor as referenced by Plumbing Detail No. 10/P-12.**

Answer: Concrete features to be built per information provided on the P-12 drawing. Rebar is not required. The contractor to also follow the interceptor's manufacturer's installation instructions.

31. Question: **Detail identification numbers appear to be missing from all of the details shown by Architectural Drawings A-9.3, A-9.4 and A-9.5.**

Answer: Disregard empty circles on the titles. Plans are tied back to overall floor plan per name/ number tag.

32. Question: **Specification Section 02620-Subdrainage, paragraph 1.01 A.2 refers to a slab-on-grade drainage system, but the documents show no reference to this requirement.**

Answer: Specification Section 02620 Sub-drainage relates to the retaining wall and building footing drains as shown on the Civil plans and details.

33. Question: **The NJ Transit insurance requirements indicated by the Deed of Easement, Article 8, do not agree with those indicated by Exhibit F-General Requirements for Working Within the Right of Way and the NJ Transit Temporary Access document. Which is correct?**

Answer: The Insurance requirements of Article 9 of the General Conditions for the construction contract for this Project incorporate New Jersey Transit's current insurance requirements and supersede those insurance requirements included in both the Deed of Easement, Article 8, and those included in the Exhibit F document. The contractor's fulfillment of the insurance requirements of Article 9 of the General Conditions will satisfy the insurance requirements of New Jersey Transit.

34. Question: **Structural Drawing S-1D shows no reference to the foundation work for the loading dock and trash enclosure areas.**

Answer: Follow Details on sheet A-5.2. See Attachment #2.2 for revised Drawing A-5.2

35. Question: **Structural Drawing S-1D shows no information for the exterior retaining walls and stair at Door S101C.**

Answer: Follow Details on sheet A-0.6. See Attachment #2.2 for revised Drawing A-5.2

36. Question: **Furnish structural details for the concrete pad at the cooling tower as referenced by HVAC Detail No. 2/HVAC-2.**

Answer: Contractor shall hire structural engineer to design cooling tower support rails and concrete pad as required by the cooling tower manufacturer. Provide signed / sealed drawings by a N.J. licensed engineer.

37. Question: **Furnish structural details for the planter retaining walls and stairs referenced by Plaza Plan Detail No. 1 on Architectural Site Plan Drawing A-0.6.**

Answer: Follow Details on sheet A-0.6. See Attachment #2.2 for revised Drawing A-5.2

38. Question: **Specification Section 11451-Residential Appliances indicates a requirement for refrigerators at Faculty Dining and the Health Prep Room. Architectural Drawing A-9.2 indicates that the refrigerator at the Health Prep Room will be supplied by the District. Please confirm whether the District will also supply the refrigerator at Faculty Dining.**

Answer: Disregard reference to district providing refrigerator on the A-9.2 drawing. Follow Specification section 11451.

D. CHANGES TO THE DRAWINGS:

1. **REPLACE:** Substitute following drawings, noted as Revision #10, dated 03/25/2013, issued herewith as Attachment 2.2.

a. ARCHITECTURAL DRAWINGS:

A-0.6	ARCHITECTURAL SITE PLAN
A-1.1	FIRST FLOOR NORTH WING PARTIAL PLAN
A-1.3	CENTRAL WING PARTIAL FIRST FLOOR PLAN
A-1.5	FIRST FLOOR SOUTH WING PLAN
A-1.6	SECOND FLOOR NORTH WING PLAN

A-1.7	SECOND FLOOR NORTH WING PLAN
A-1.8	SECOND FLOOR CENTRAL WING PLAN
A-1.9	SOUTH WING UPPER GYMNASIUM & CAFETORIUM
A-2.0	ROOF PLAN
A-3.0	ELEVATIONS & DETAILS
A-3.1	ELEVATIONS & DETAILS
A-3.2	ELEVATIONS
A-3.3	ELEVATIONS
A-4.0	BUILDING AND WALL SECTIONS
A-4.1	BUILDING AND WALL SECTIONS, MEDIA CENTER
A-4.1A	BUILDING AND WALL SECTIONS, MEDIA CENTER
A·4.3	BUILDING AND WALL SECTIONS
A·4.4	BUILDING AND WALL SECTIONS
A-4.6	BUILDING AND WALL SECTIONS
A-4.7	BUILDING AND WALL SECTIONS
A-4.8	BUILDING AND WALL SECTIONS, CAFETORIUM
A-4.9	BUILDING AND WALL SECTIONS
A-5.0	STAIR PLANS, & SECTIONS STAIRWELL 1
A-5.1	STAIR PLANS & SECTIONS STAIRWELLS 3 & 4
A-5.2	STAIR PLANS & SECTIONS STAIRWELL 5, STAGE, GYM & KITCHEN
A-5.3	ENLARGED PLANS, VESTIBULE 1, LOBBY AREA & STAIRWELL 2
A-6.2	DOOR SCHEDULE
A-6.3	DOOR AND VISION PANEL TYPES
A-7.4	FIRST FLOOR CENTRAL & SOUTH WING REFLECTED CEILING PLAN
A-7.5	FIRST FLOOR SOUTH WING REFLECTED CEILING PLAN

b. STRUCTURAL DRAWINGS:

S-3A	ROOF FRAMING PLAN '3A' NORTH WING

c. ELECTRICAL DRAWINGS:

E-1	ELECTRICAL SYMBOLS, NOTES & LEGENDS
E-9	ELECTRICAL PANEL SCHEDULES
E-11	ELECTRICAL PANEL SCHEDULES
EP-8	SECOND FLOOR PARTIAL POWER PLAN

E. ATTACHMENTS:

Attachment 2.1 Specifications

Attachment 2.2 Drawings

Attachment 2.3 OBSERVATION REPORT For Existing Footings and Foundation Walls

03/28/2013

NJSDA Date

Aruna Reddy, Program Officer

---------- **End of Addendum No. 2** ----------

NJSDA
1 West State Street
Trenton, NJ 08625
Phone: 609-943-5955
Fax: 609-656-4642

Date: **March 28, 2013**

PROJECT #: **PA-0006-C04**

DESCRIPTION: **New Marshall Street Elementary School**

Addendum No. 2

Acknowledgement of Receipt of Addendum

Contractor must acknowledge the receipt of the Addendum by signing in the space provided below and returning via fax to (609-656-4642) or email to djohnson@njsda.gov). Signed acknowledgement must be received prior to the Bid Due Date. Acknowledgement of the Addendum must be made in Section E.6 of the Price Proposal Submission.

_____	_____
Signature	Print Name
_____	_____
Company Name	Date

SECTION 10210 – WALL LOUVERS

PART 1 - GENERAL

1.1 SUMMARY

A. Section Includes:

1. Fixed, extruded-aluminum wall louvers.

1.2 PERFORMANCE REQUIREMENTS

A. Design: Design louvers, including comprehensive engineering analysis by a qualified engineer, using structural performance requirements and design criteria indicated.

B. Structural Performance: Louvers shall withstand the effects of gravity loads and the following loads and stresses within limits and under conditions indicated without permanent deformation of louver components, noise or metal fatigue caused by louver blade rattle or flutter, or permanent damage to fasteners and anchors.

1. Wind Loads: Determine loads based on a uniform pressure of 30 lb./sq. ft. (1435 Pa), acting inward or outward.

C. Louver Performance Ratings: Provide louvers complying with requirements specified, as demonstrated by testing manufacturer's stock units identical to those provided, except for length and width according to AMCA 500-L.

1.3 SUBMITTALS

A. Product Data: For each type of product indicated.

1. For louvers specified to bear AMCA seal, include printed catalog pages showing specified models with appropriate AMCA Certified Ratings Seals.

B. Shop Drawings: For louvers and accessories. Include plans, elevations, sections, details, and attachments to other work. Show frame profiles and blade profiles, angles, and spacing.

C. Samples: For each type of metal finish required.

D. Submittal: For louvers indicated to comply with structural performance requirements and design criteria indicated.

E. Product Test Reports: Based on tests performed according to AMCA 500-L.

PART 2 - PRODUCTS

2.1 MATERIALS

A. Aluminum Extrusions: ASTM B 221M, Alloy 6063-T5.

B. Aluminum Sheet: ASTM B 209M, Alloy 3003 with temper as required for forming.

C. Fasteners: Use types and sizes to suit unit installation conditions.

1. For fastening aluminum, use aluminum or 300 series stainless-steel fasteners.

2.2 FABRICATION, GENERAL

A. Fabricate frames, including integral sills, to fit in openings of sizes indicated, with allowances made for fabrication and installation tolerances, adjoining material tolerances, and perimeter sealant joints.

B. Join frame members to each other and to fixed louver blades with fillet welds concealed from view welds, threaded fasteners, or both, as standard with louver manufacturer unless otherwise indicated or size of louver assembly makes bolted connections between frame members necessary.

2.3 FIXED, EXTRUDED-ALUMINUM LOUVERS

A. Horizontal High Performance Storm-Resistant Louver

1. Manufacturers:

a) Architectural Louvers; Model E4WH. (basis of design)

b) Or approved equal.

2. Louver Depth: 4 inches (100 mm)
3. Blade Profile: Front horizontal drainable blade with gutter for water diversion to jambs. Rear vertical chevron blade (sight proof).
4. Frame and Blade Nominal Thickness: Not less than 0.060 inch (1.52 mm) for blades and 0.080 inch (2.03 mm) for frames.
5. Louver Performance Ratings:

a. Free Area: Not less than 8.0 sq. ft. (0.74 sq. m) for 48-inch- (1220-mm-) wide by 48-inch- (1220-mm-) high louver.
b. Air Performance: Not more than 0.15-inch wg (37-Pa) static pressure drop at 800-fpm (4.1-m/s) free-area velocity.

c. Wind-Driven Rain Performance: Not less than 100 percent effectiveness when subjected to a rainfall rate of 3 inches (75 mm) per hour and a wind speed of 29 mph (13 m/s) at a core-area intake velocity of 690 fpm (3.5 m/s). Not less than 99 percent effectiveness when subjected to a rainfall rate of 8 inches (200 mm) per hour and a wind speed of 50 mph (22 m/s) at a core-area intake velocity of 690 fpm (3.5 m/s).

6. AMCA Seal: Mark units with AMCA Certified Ratings Seal.

2.4 LOUVER SCREENS

A. General: Provide screen at each exterior louver.

B. Louver Screen Frames: Same kind and form of metal as indicated for louver to which screens are attached.

C. Louver Screening: Same kind of metal as indicated for louver.

1. Insect Screening: Aluminum, 16 x 18 square mesh, 0.011-inch (0.28-mm) wire.
2. Bird Screening: Flattened, expanded aluminum, 3/4 by 0.050 inch (19 by 1.27 mm) thick.

2.5 ALUMINUM FINISHES

A. High-Performance Organic Finish: 3-coat fluoropolymer finish complying with AAMA 2605 and containing not less than 70 percent PVDF resin by weight in color coat. Prepare, pre-treat, and apply coating to exposed metal surfaces to comply with coating and resin manufacturers' written instructions.

1. Color and Gloss: As selected by Architect from manufacturer's full range.

PART 3 - EXECUTION

3.1 INSTALLATION

A. Locate and place louvers and vents level, plumb, and at indicated alignment with adjacent work.

B. Use concealed anchorages where possible. Provide brass or lead washers fitted to screws where required to protect metal surfaces and to make a weather-tight connection.

C. Provide perimeter reveals and openings of uniform width for sealants and joint fillers, as indicated.

D. Repair damaged finishes so no evidence remains of corrective work. Return items that cannot be refinished in the field to the factory and refinish entire unit or provide new units.

E. Protect galvanized and nonferrous-metal surfaces that will be in contact with concrete, masonry, or dissimilar metals from corrosion and galvanic action by applying a heavy coating of bituminous paint.

END OF SECTION 10210

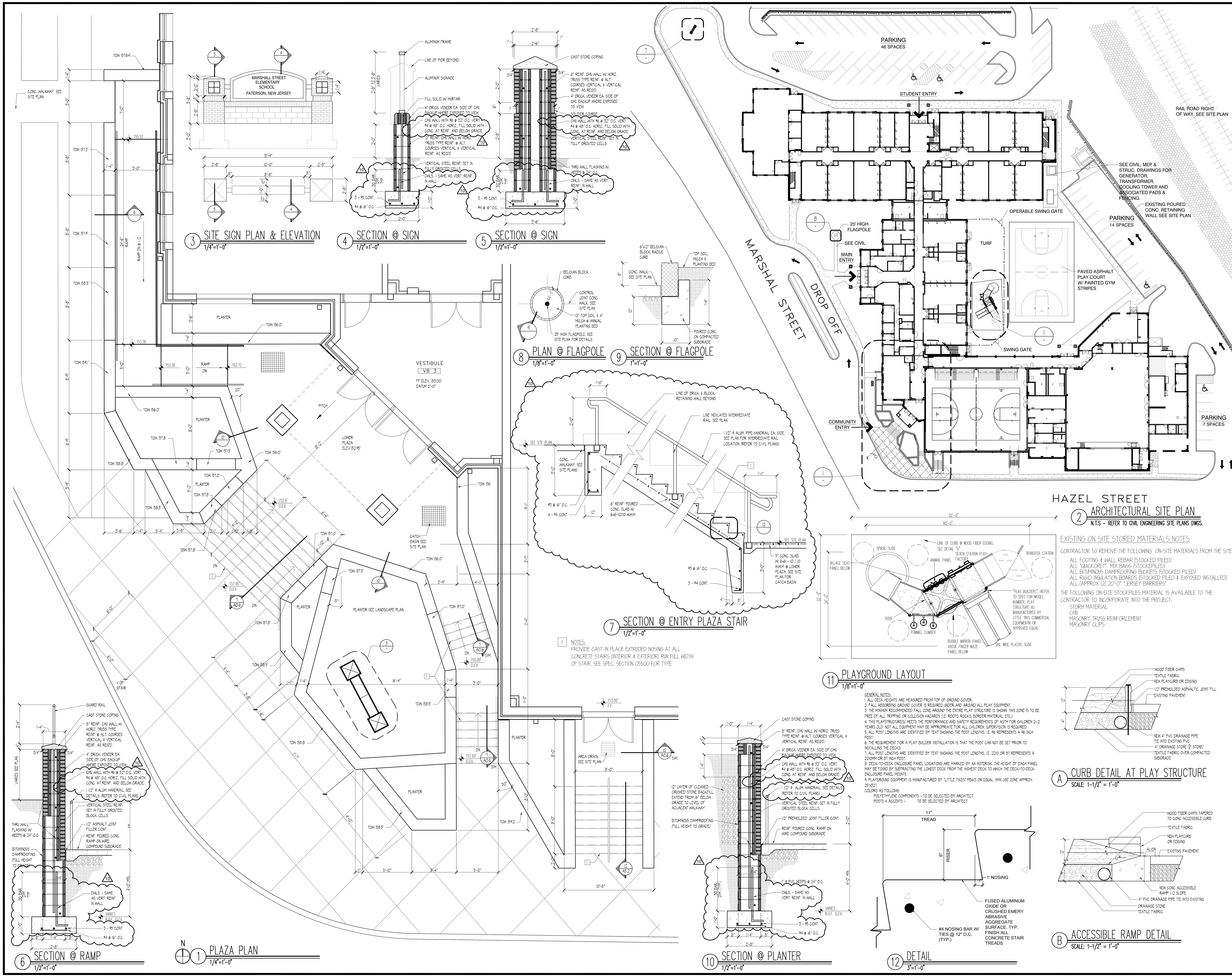

NOTES:
1. PROVIDE CAST-IN PLACE EXTRUDED NOSING AT ALL CONCRETE STAIRS (INTERIOR & EXTERIOR) RUN FULL WIDTH OF STAIR. SEE SPEC. SECTION 05500 FOR TYPE

EXISTING ON SITE STORED MATERIALS NOTES

CONTRACTOR TO REMOVE THE FOLLOWING ON-SITE MATERIALS FROM THE SITE:

- ALL FOOTING & WALL REBAR (STOCKED PILED)
- ALL "QUICKCRET" MIX BAGS (STOCKEPILED)
- ALL BITUMINOUS DAMPROOFING BUCKETS (STOCKED PILED)
- ALL RIGID INSULATION BOARDS (STOCKED PILED & EXPOSED INSTALLED)
- ALL (APPROX 12) 20'-0" "JERSEY BARRIERS"

THE FOLLOWING ON-SITE STOCKPILES MATERIAL IS AVAILABLE TO THE CONTRACTOR TO INCORPORATE INTO THE PROJECT:

- STORM MATERIAL
- CMU
- MASONRY TRUSS REINFORCEMENT
- MASONRY CLIPS

GENERAL NOTES:
1. ALL DECK HEIGHTS ARE MEASURED FROM TOP OF GROUND COVER.
2. FALL ABSORBING GROUND COVER IS REQUIRED UNDER AND AROUND ALL PLAY EQUIPMENT.
3. THE MINIMUM RECOMMENDED FALL ZONE AROUND THE ENTIRE PLAY STRUCTURE IS SHOWN. THIS ZONE IS TO BE FREE OF ALL TRIPPING OR COLLISION HAZARDS (I.E. ROOTS, ROCKS, BORDER MATERIAL, ETC.).
4. THIS PLAYSTRUCTURE(S) MEETS THE PERFORMANCE AND SAFETY REQUIREMENTS OF ASTM FOR CHILDREN 2-12 YEARS OLD. NOT ALL EQUIPMENT MAY BE APPROPRIATE FOR ALL CHILDREN. SUPERVISION IS REQUIRED.
5. ALL POST LENGTHS ARE IDENTIFIED BY TEXT SHOWING THE POST LENGTHS, I.E. 96 REPRESENTS A 96 INCH POST.
6. THE REQUIREMENT FOR A PLAY BUILDER INSTALLATION IS THAT THE POST CAN NOT BE SET PRIOR TO INSTALLING THE DECKS.
7. ALL POST LENGTHS ARE IDENTIFIED BY TEXT SHOWING THE POST LENGTHS, I.E. 2210 OR 87 REPRESENTS A 2210MM OR 87 INCH POST.
8. DECK-TO-DECK ENCLOSURE PANEL LOCATIONS ARE MARKED BY AN ASTERISK. THE HEIGHT OF EACH PANEL MAY BE FOUND BY SUBTRACTING THE LOWEST DECK FROM THE HIGHEST DECK TO WHICH THE DECK-TO-DECK ENCLOSURE PANEL MOUNTS.
9. PLAYGROUND EQUIPMENT IS MANUFACTURED BY "LITTLE TIKES" PB413 OR EQUAL. (MIN. USE ZONE APPROX. 25'X32')

COLORS AS FOLLOWS:
- POLYETHYLENE COMPONENTS - TO BE SELECTED BY ARCHITECT
- POSTS & ACCENTS - TO BE SELECTED BY ARCHITECT

SDA
NJ SCHOOLS DEVELOPMENT AUTHORITY

STATE OF NEW JERSEY
ECONOMIC DEVELOPMENT AUTHORITY

DesignIdeasGroup
architecture + planning, llc
15 Bethany Street
New Brunswick, NJ 08901
T: 732.249.6242
F: 732.247.1825
142 West 36th Street
New York, NY 10018
T: 645.584.8419

Richard D. Alderiso, AIA
NJ RA AI 15023 NY RA 027416

Vincent A. Myers, AIA
NJ RA AI 11415

Jeffrey D. Venezia, AIA
NJ RA AI 08271 NY RA 023719-1

Warren W. Winter, AIA
NJ RA AI 06853 NY RA 010562-1

CONSTRUCTION PROGRAM FOR THE
MARSHALL STREET ELEMENTARY SCHOOL
DOE# 4010-N01-02-0169
NJSDA# PA-0006-C04
DCA# OLCEHPC-05-013 ERU# 6095-05
ADDRESS
NJSDA
1 WEST STATE STREET
TRENTON, NEW JERSEY

PROJECT NO.: 2012-213.00

ISSUED
05/15/09 ISSUED FOR BID
07/06/09 ISSUED FOR BID
1 08/06/09 DCA REVIEW COMMENTS
9 12/17/12 SDA AMENDMENTS 11 & 12
10 03/25/13 ADDENDUM NO. 2

DRAWING TITLE
ARCHITECTURAL SITE PLAN

DRAWING No.
A-0.6
DWG. NO. OF

Drawing name: P:\2012\2012-213.00 Marshall St. Elementary – Restart\DRAWINGS\Condocs\A0_OVERALL AND EXTING\213-A0.6.dwg Plotted By: MFERRAGAMO Mar 26, 2013 – 8:51am

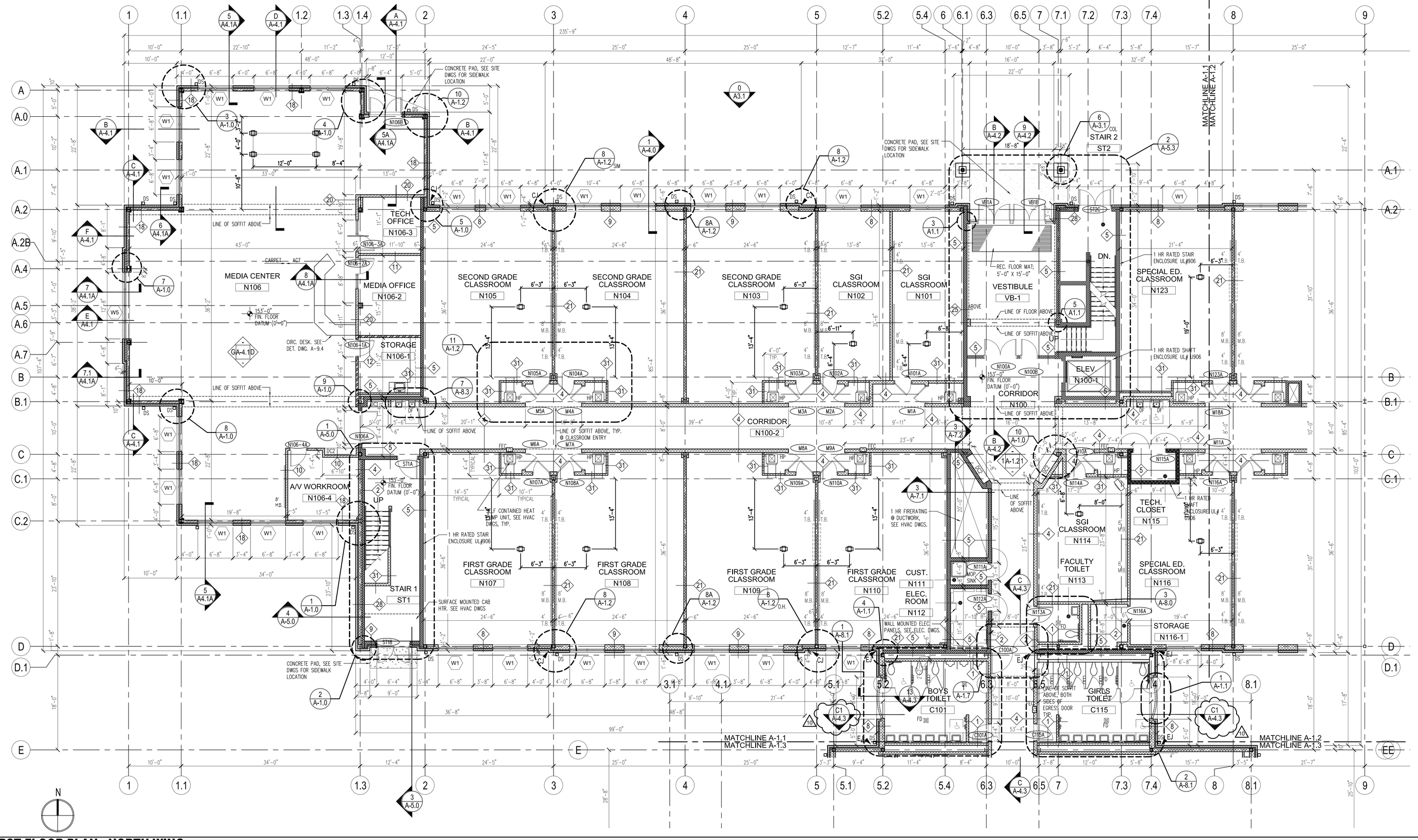

FIRST FLOOR PLAN - NORTH WING

SCALE: 1/8" = 1'-0"

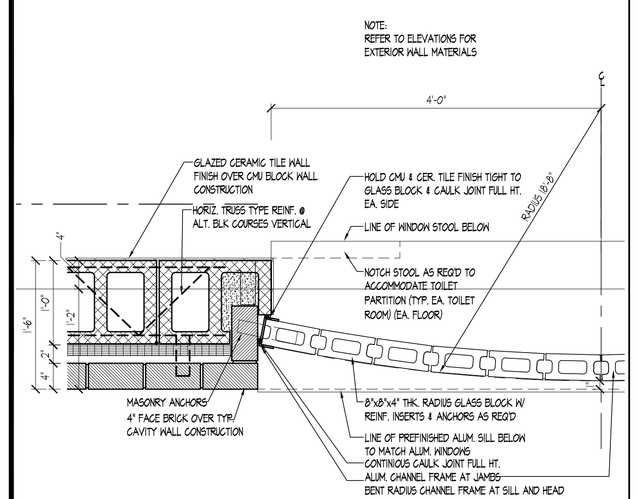

SCALE: 1" = 1'-0"

1 | GLASS BLOCK WALL DETAIL @ FIRST FLOOR

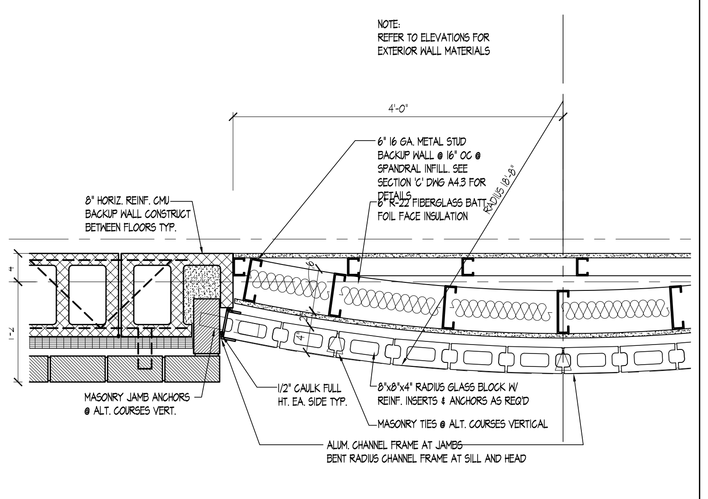

SCALE: 1" = 1'-0"

2 | GLASS BLOCK WALL DETAIL @ SPANDRAL COND.

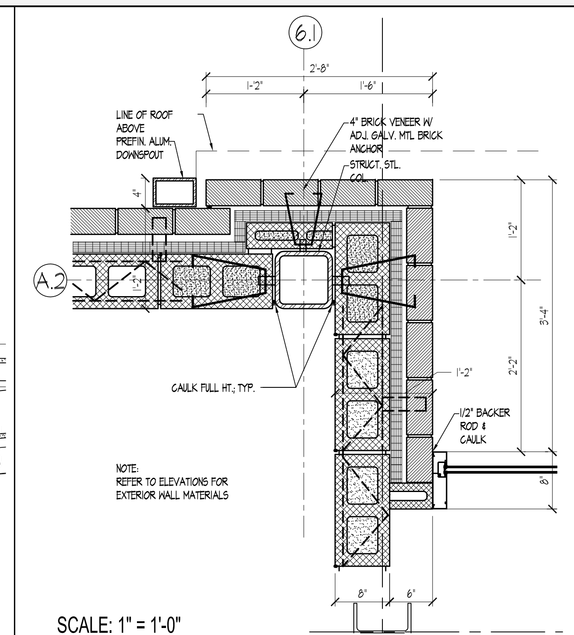

SCALE: 1" = 1'-0"

3 | PLAN DETAIL

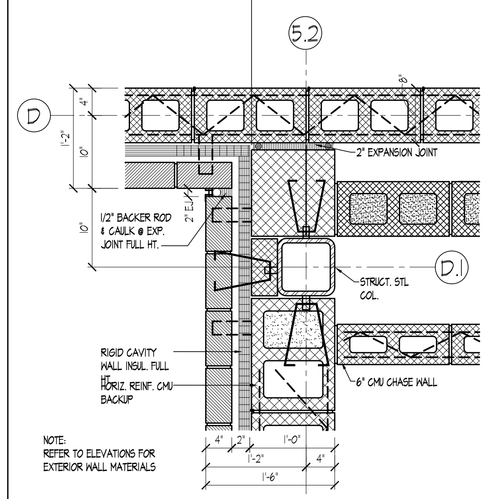

SCALE: 1" = 1'-0"

4 | PLAN DETAIL

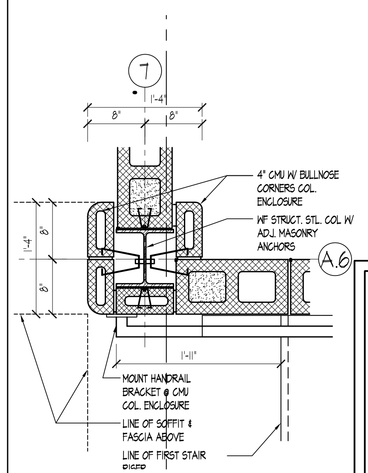

SCALE: 1" = 1'-0"

5 | PLAN DETAIL

NOTE FOR ALL PLAN DETAILS
REFER TO BLDG. ELEVATIONS ON A3 SERIES FOR EXTERIOR FINISHES & DIMENSIONS.

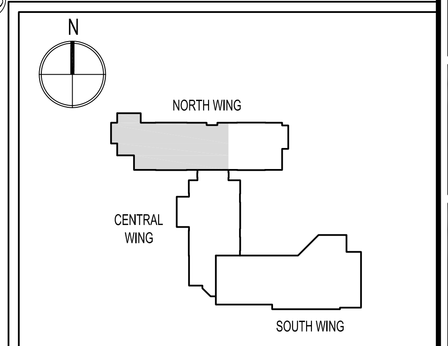

KEY PLAN N.T.S.

SDA

NJ SCHOOLS DEVELOPMENT AUTHORITY

STATE OF NEW JERSEY

ECONOMIC DEVELOPMENT AUTHORITY

DesignIdeasGroup
architecture + planning, llc
15 Bethany Street
New Brunswick, NJ 08901
T: 732.249.6242
F: 732.247.1825
142 West 36th Street
New York, NY 10018
T: 645.584.8419

Richard D. Alderiso, AIA
NJ RA AI 15023 NY RA 027416

Vincent A. Myers, AIA
NJ RA AI 11415

Jeffrey D. Venezia, AIA
NJ RA AI 08271 NY RA 023719-1

Warren W. Winter, AIA
NJ RA AI 06853 NY RA 010562-1

CONSTRUCTION PROGRAM FOR THE
MARSHALL STREET ELEMENTARY SCHOOL
DOE# 4010-N01-02-0169
NISDA# PA-0006-C04
DCA# OLCEHPC-05--013 ERU# 6095-05
ADDRESS
NISDA
1 WEST STATE STREET
TRENTON, NEW JERSEY

PROJECT NO.: 2012-213.00

ISSUED

05/15/09	ISSUED FOR BID
07/06/09	ISSUED FOR BID
1 08/06/09	DCA REVIEW COMMENTS
2 12/17/12	SDA AMENDMENTS 11 & 12
3 03/25/13	ADDENDUM NO. 2

DRAWING TITLE
NORTH WING
PARTIAL FIRST FLOOR PLAN

DRAWING No.
A-1.1

DWG. NO. OF

Drawing name: P:\2012\2012-213\06 Marshall St Elementary - Revised\DRAWINGS\Contract Set_2-13\06 PLANS\213-A1.1.dwg Plotted By: MFERRACANE Mar 25, 2013 - 5:52pm

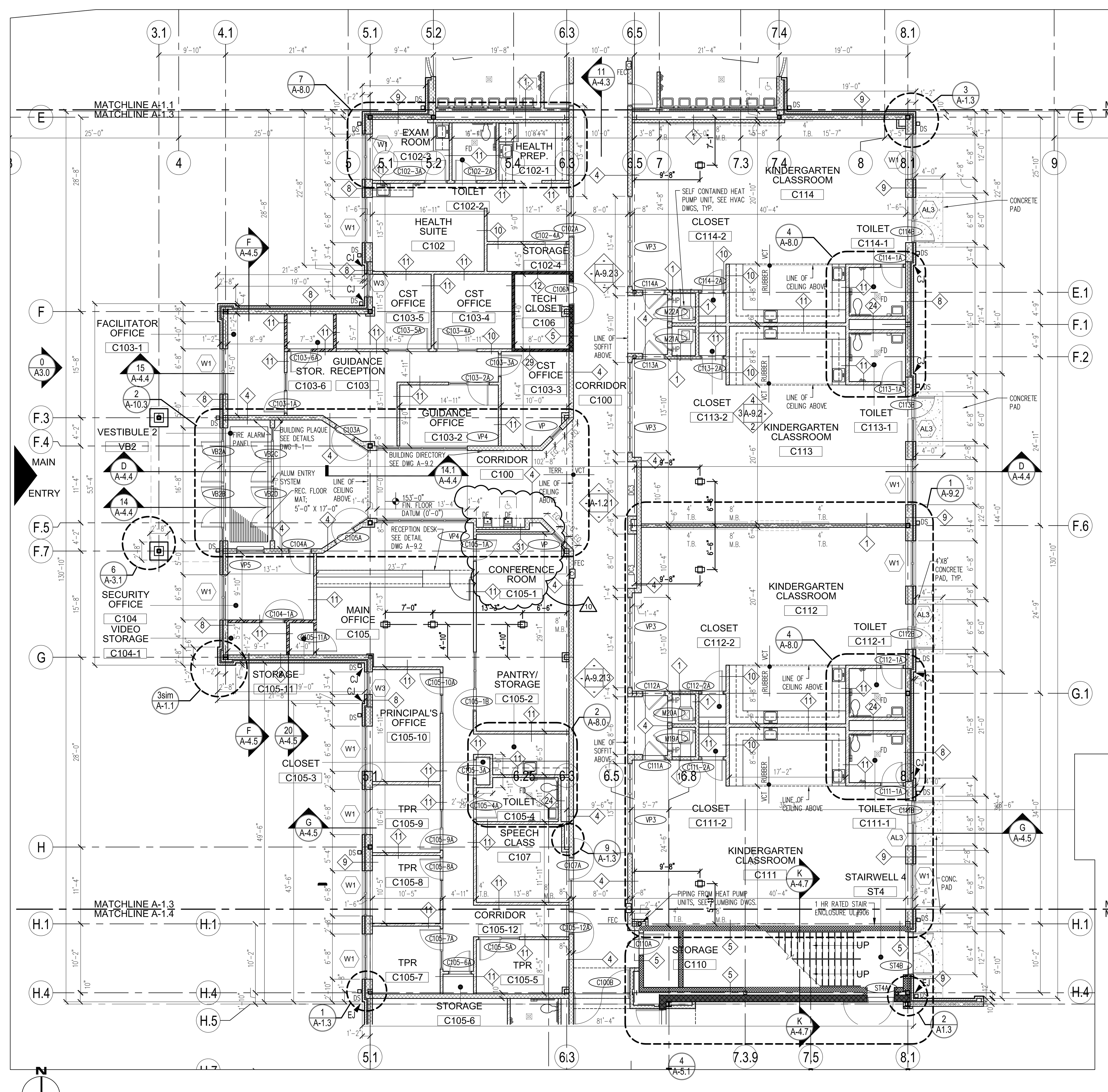

1 | FIRST FLOOR PLAN - CENTRAL WING SCALE: 1/8" = 1'-0"

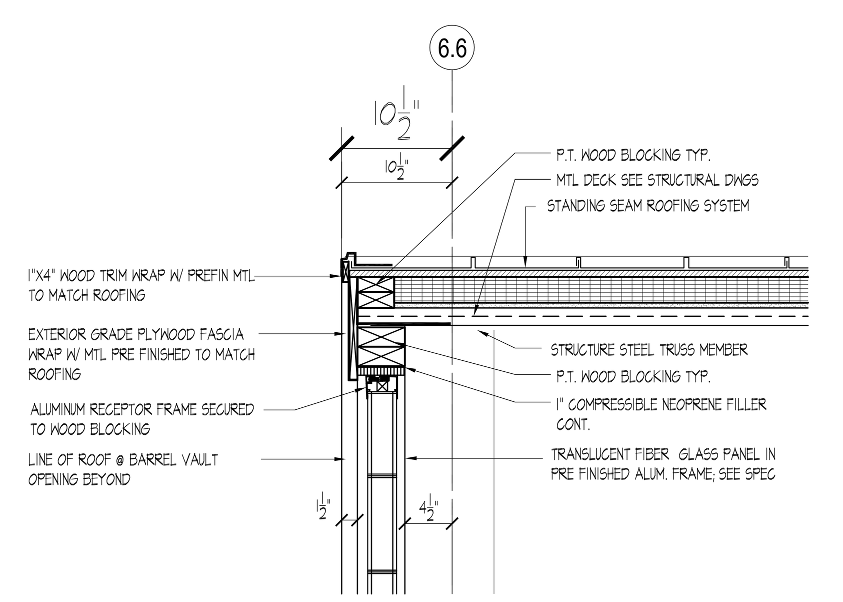

4 | HEAD DETAIL REFER TO WALL SECT. DWGS. A4.6 & A4.8 SCALE: 1" = 1'-0"

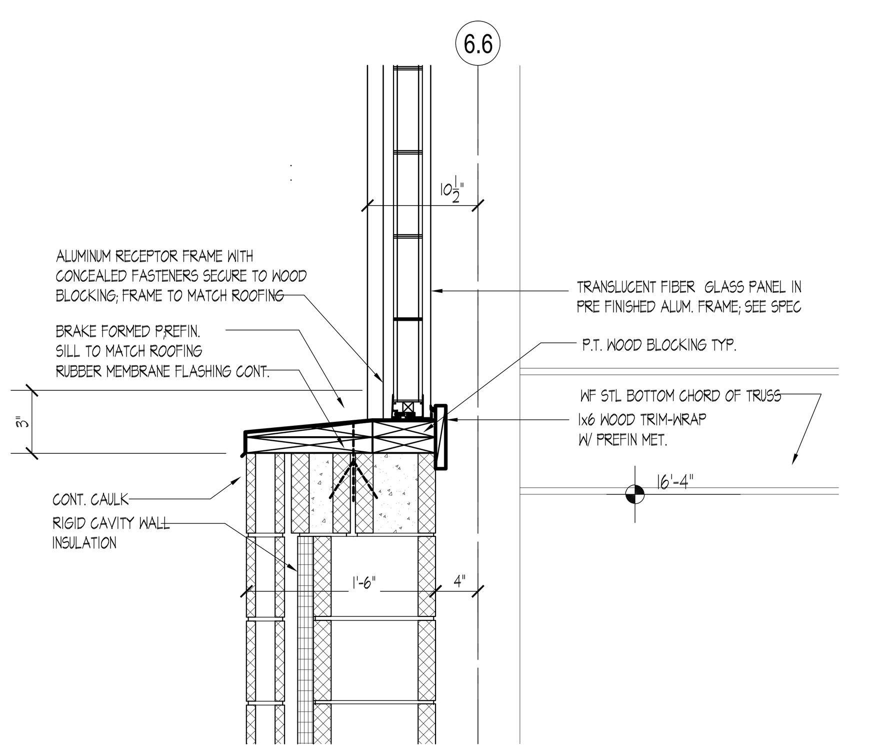

5 | SILL DETAIL REFER TO WALL SECT. DWGS. A4.6 & A4.8 SCALE: 1" = 1'-0"

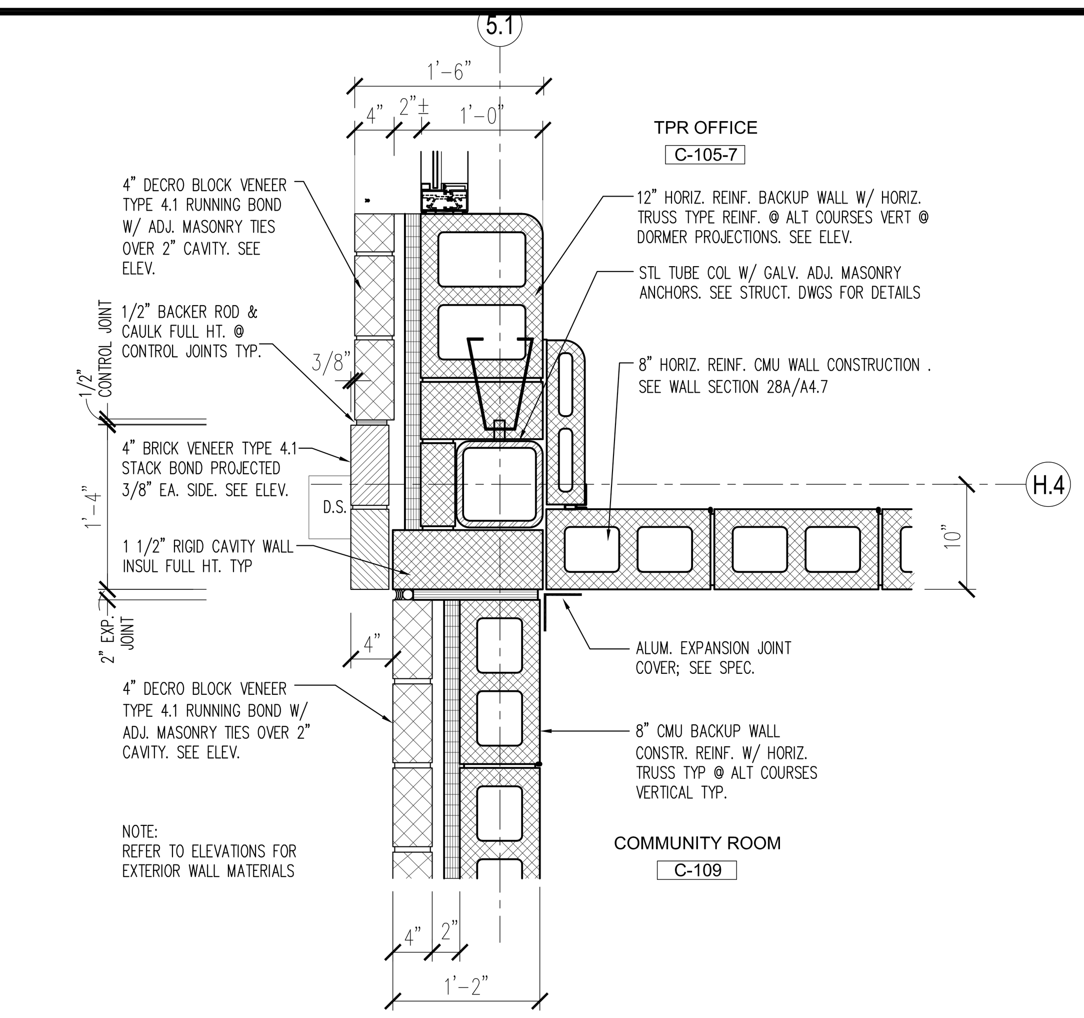

1 | PLAN DETAIL - REFER TO PLAN DETAIL 1A DWG A1.8 FOR SIM CONDITION ABOVE SCALE: 1" = 1'-0"

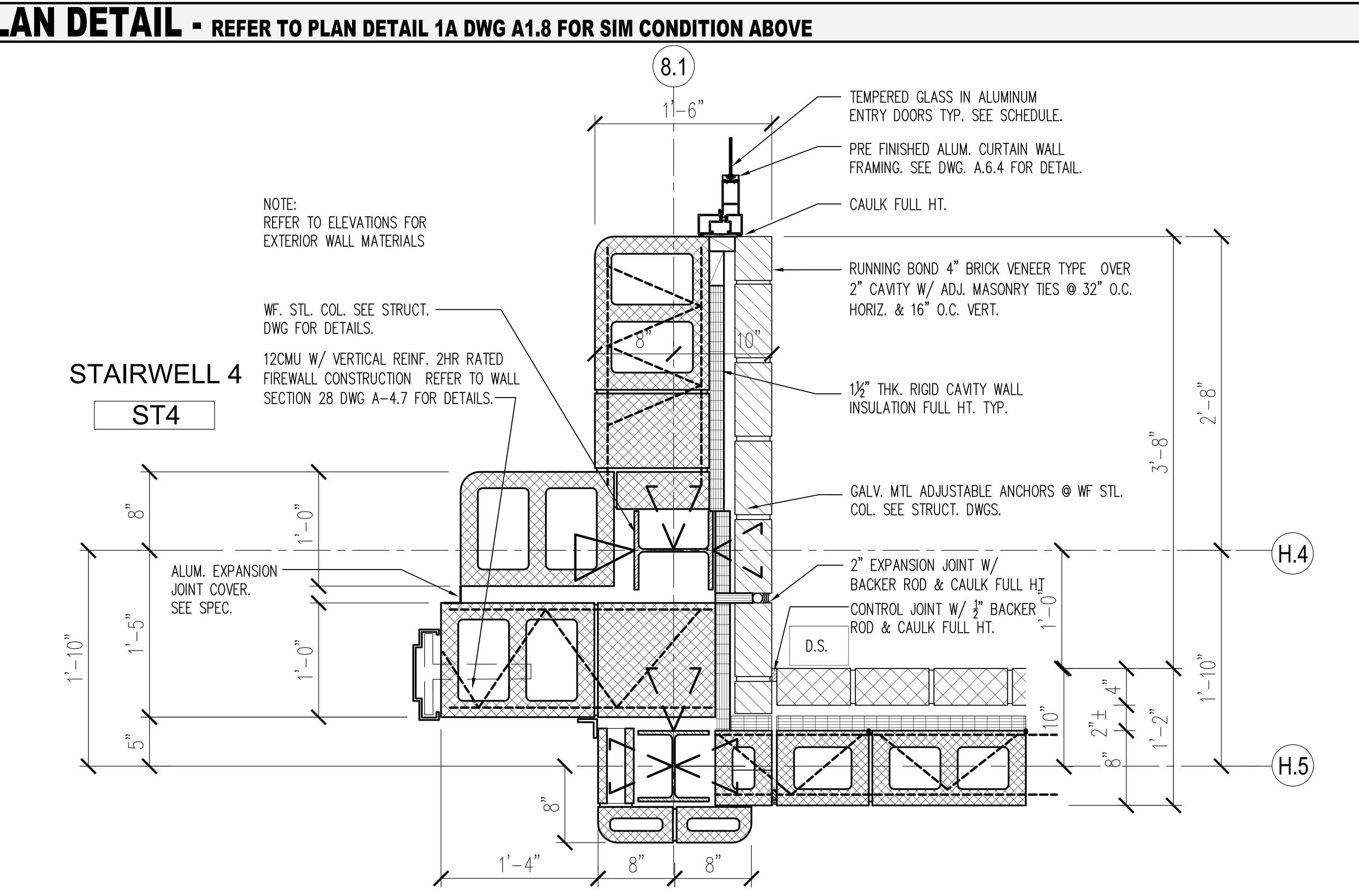

2 | PLAN DETAIL SCALE: 1" = 1'-0"

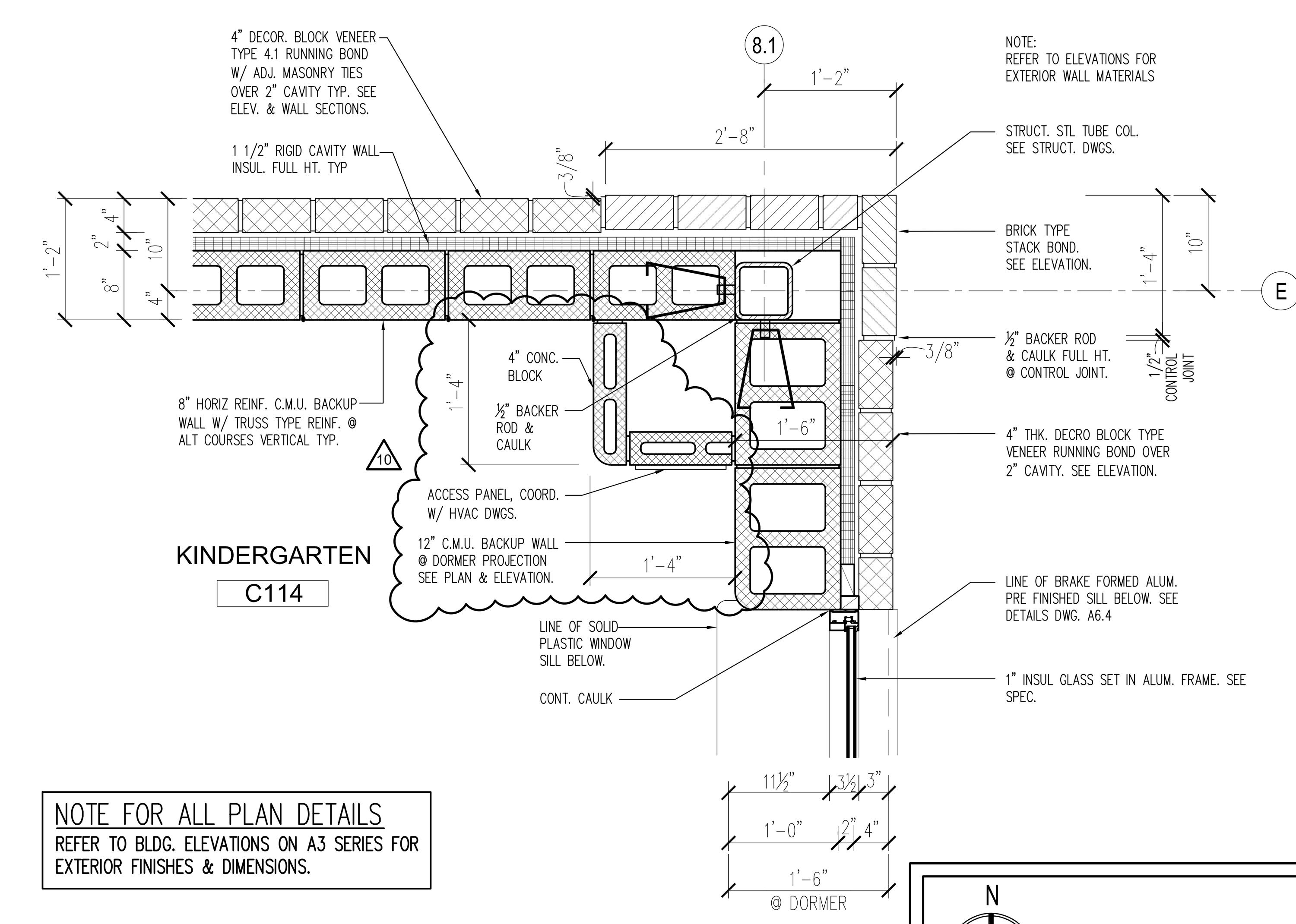

NOTE FOR ALL PLAN DETAILS
REFER TO BLDG. ELEVATIONS ON A3 SERIES FOR EXTERIOR FINISHES & DIMENSIONS.

3 | PLAN DETAIL- REFER TO PLAN DETAIL 1A DWG A1.8 FOR SIM CONDITION ABOVE SCALE: 1" = 1'-0"

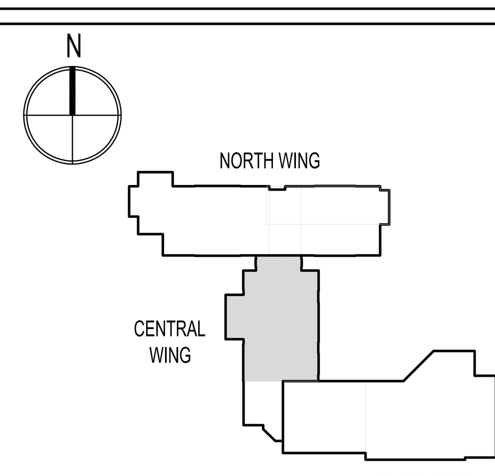

KEY PLAN N.T.S.

CONSTRUCTION PROGRAM FOR THE
MARSHALL STREET ELEMENTARY SCHOOL
DOE# 4010-N01-02-0169
NJSDA# PA-0006-C04
DCA# OLCEHPC-05--013 ERU# 6095-05
ADDRESS
NJSDA
1 WEST STATE STREET
TRENTON, NEW JERSEY

SDA
NJ Schools Development Authority
STATE OF NEW JERSEY
ECONOMIC DEVELOPMENT AUTHORITY

DesignIdeasGroup
architecture + planning, llc
15 Bethany Street
New Brunswick, NJ 08901
T: 732.249.6242
F: 732.247.1825
142 West 36th Street
New York, NY 10018
T: 645.584.8419

Richard D. Alderiso, AIA
NJ RA AI 15023 NY RA 027416
Vincent A. Myers, AIA
NJ RA AI 11415
Jeffrey D. Venezia, AIA
NJ RA AI 08271 NY RA 023719-1
Warren W. Winter, AIA
NJ RA AI 06853 NY RA 010562-1

PROJECT NO.: 2012-213.00

ISSUED
05/15/09 ISSUED FOR BID
07/06/09 ISSUED FOR BID
08/06/09 DCA REVIEW COMMENTS
12/17/12 SDA AMENDMENTS 11 & 12
03/25/13 ADDENDUM NO. 2

DRAWING TITLE
CENTRAL WING
PARTIAL FIRST FLOOR PLAN

DRAWING No.
A-1.3

DWG. NO. OF

Drawing name: P:\2012\2012-213.00 Marshall St Elementary - Restart\DRAWINGS\Condocs\A1_FLOOR PLANS\213-A1.3.dwg Plotted By: MFERRAGAMO Mar 25, 2013 - 5:53pm

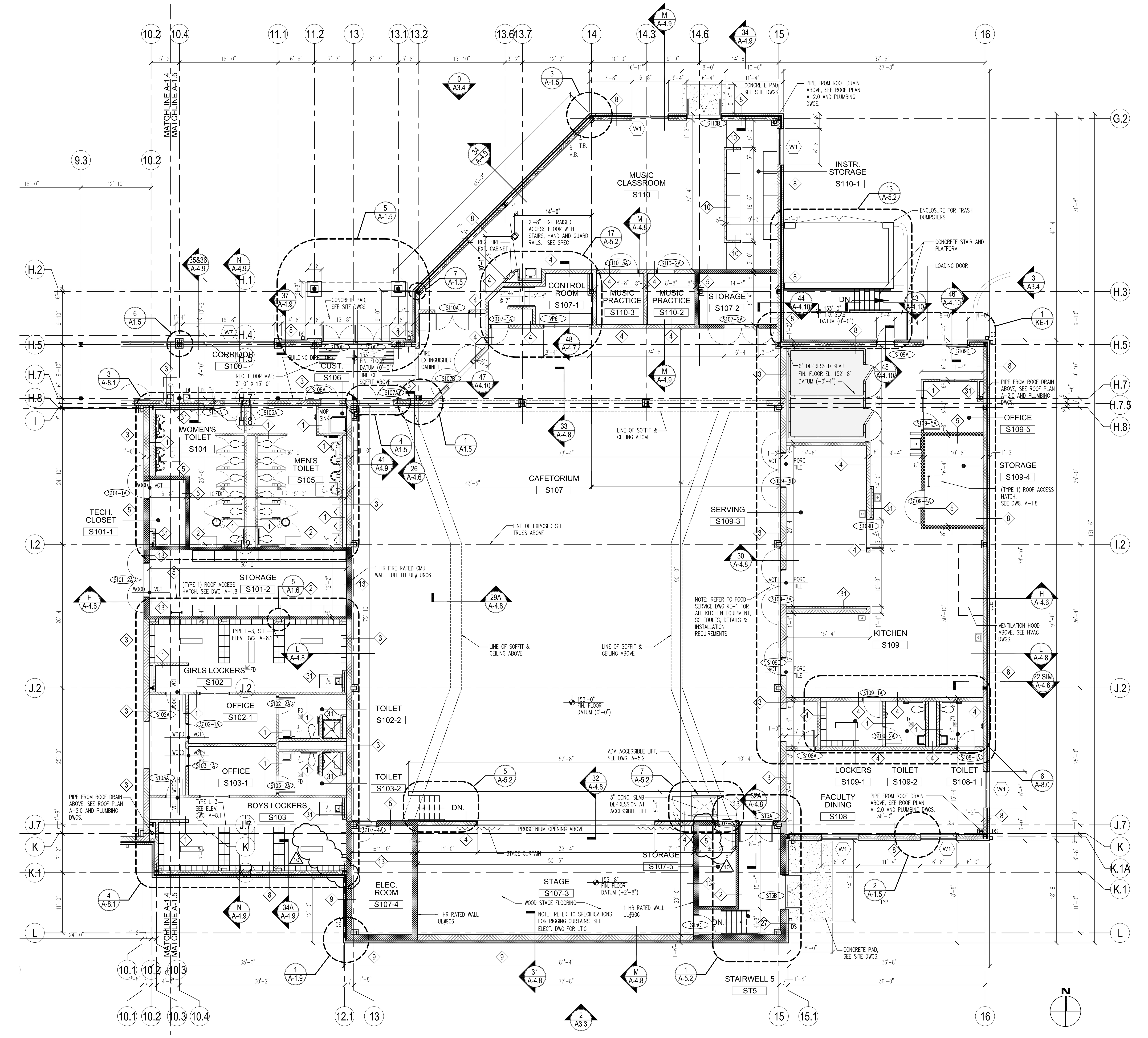

FIRST FLOOR PLAN - PARTIAL SOUTH WING

SCALE: 1/8" = 1'-0"

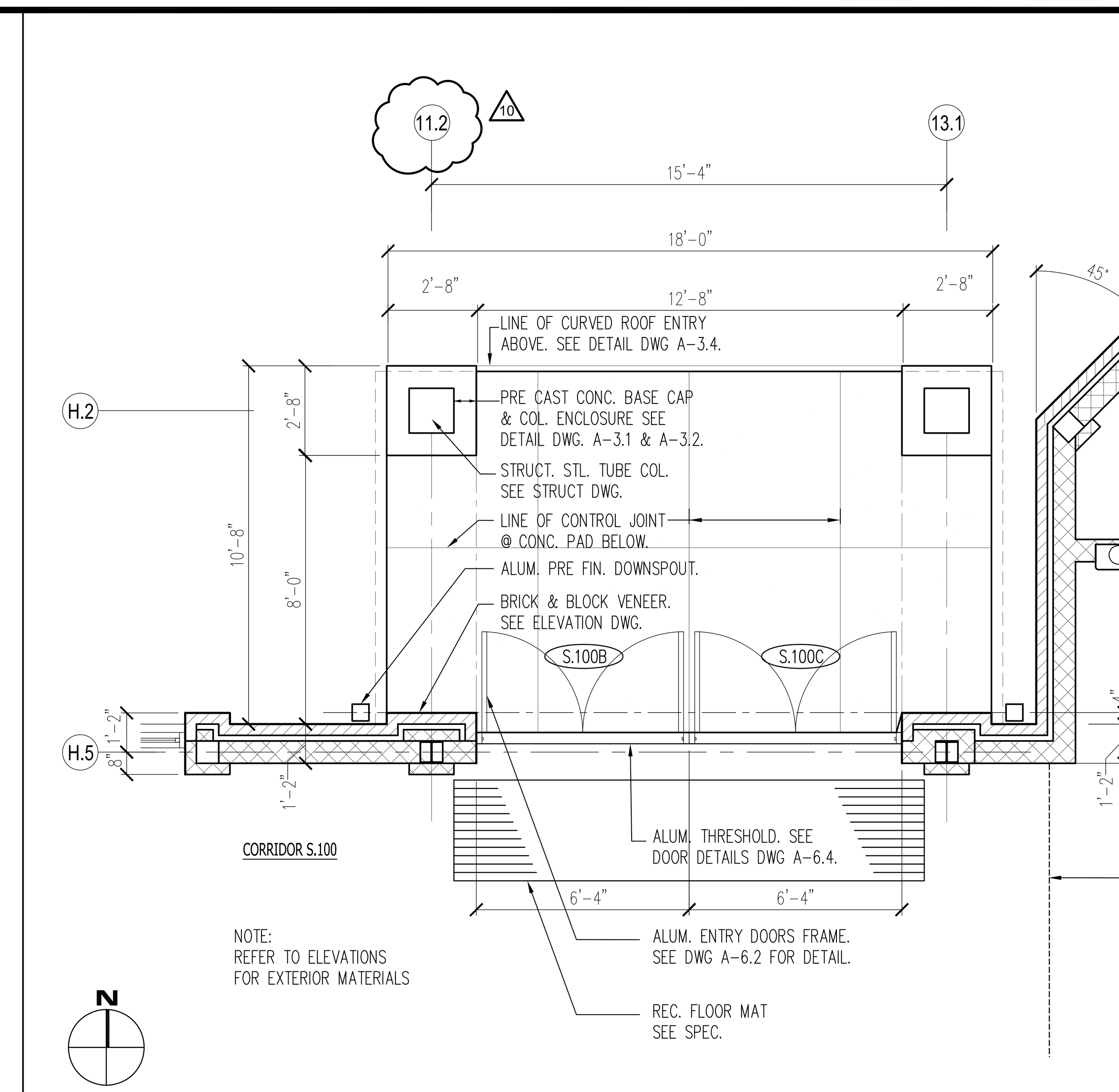

5 PLAN DETAIL @ ENTRY CANOPY #3

SCALE: 1/4" = 1'-0"

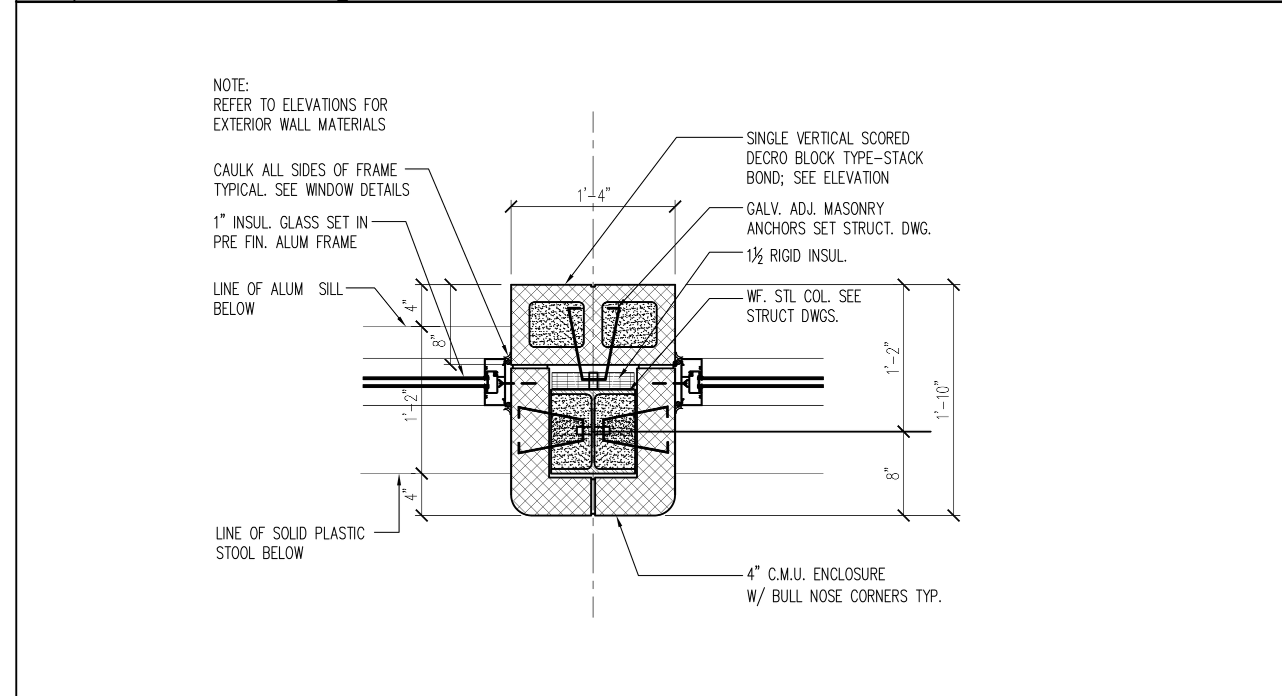

6 PLAN DETAIL

SCALE: 1" = 1'-0"

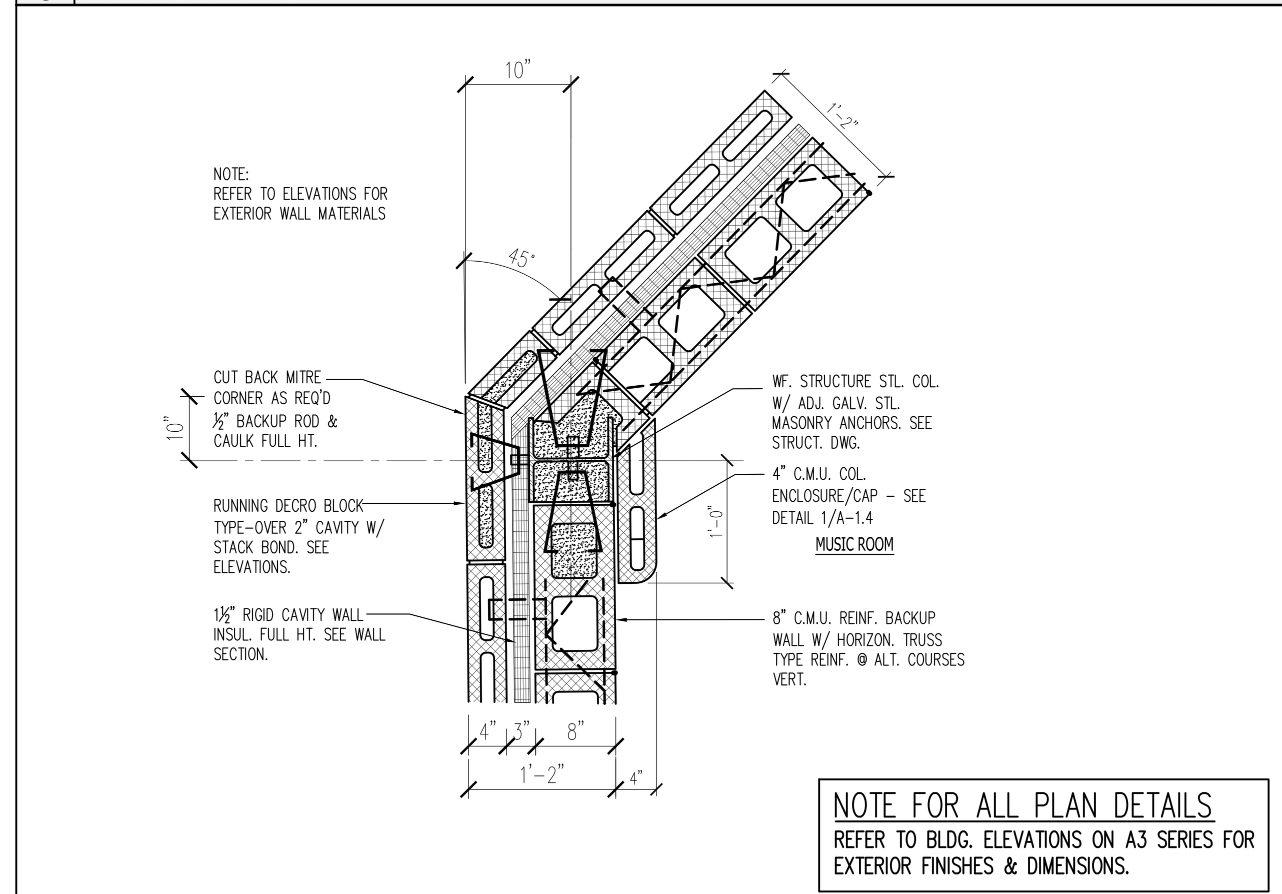

NOTE FOR ALL PLAN DETAILS.
REFER TO BLDG. ELEVATIONS ON A3 SERIES FOR EXTERIOR FINISHES & DIMENSIONS.

7 PLAN DETAIL

SCALE: 1" = 1'-0"

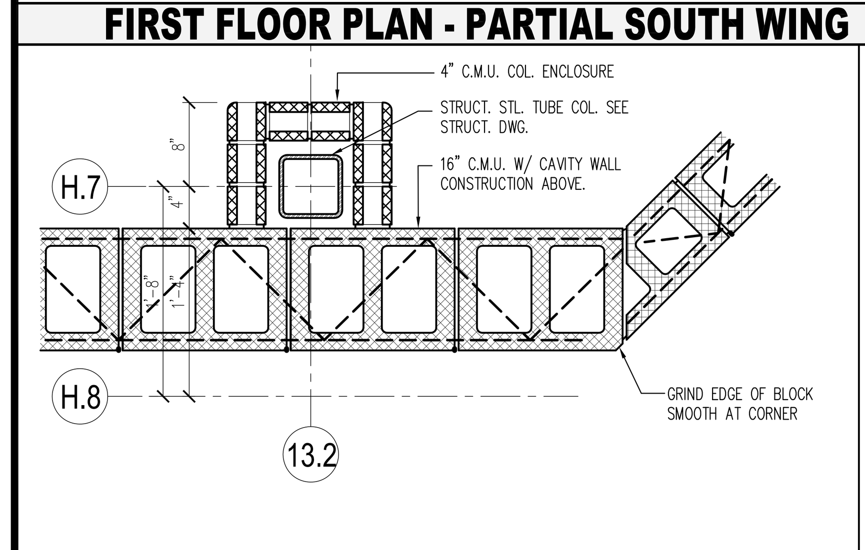

1 PLAN DETAIL

SCALE: 1" = 1'-0"

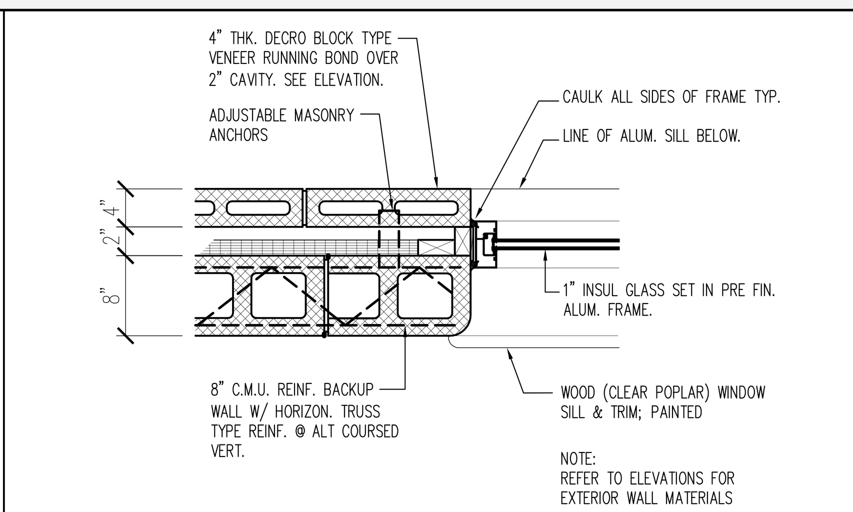

2 PLAN DETAIL

SCALE: 1" = 1'-0"

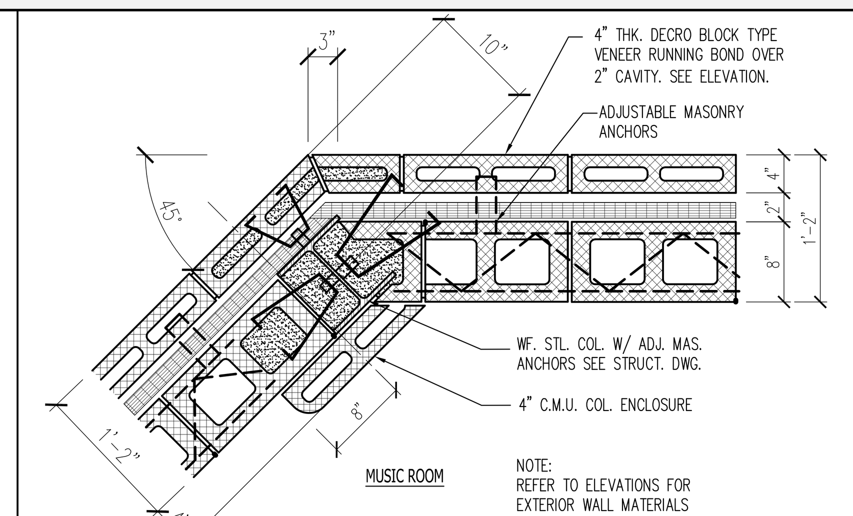

3 PLAN DETAIL

SCALE: 1" = 1'-0"

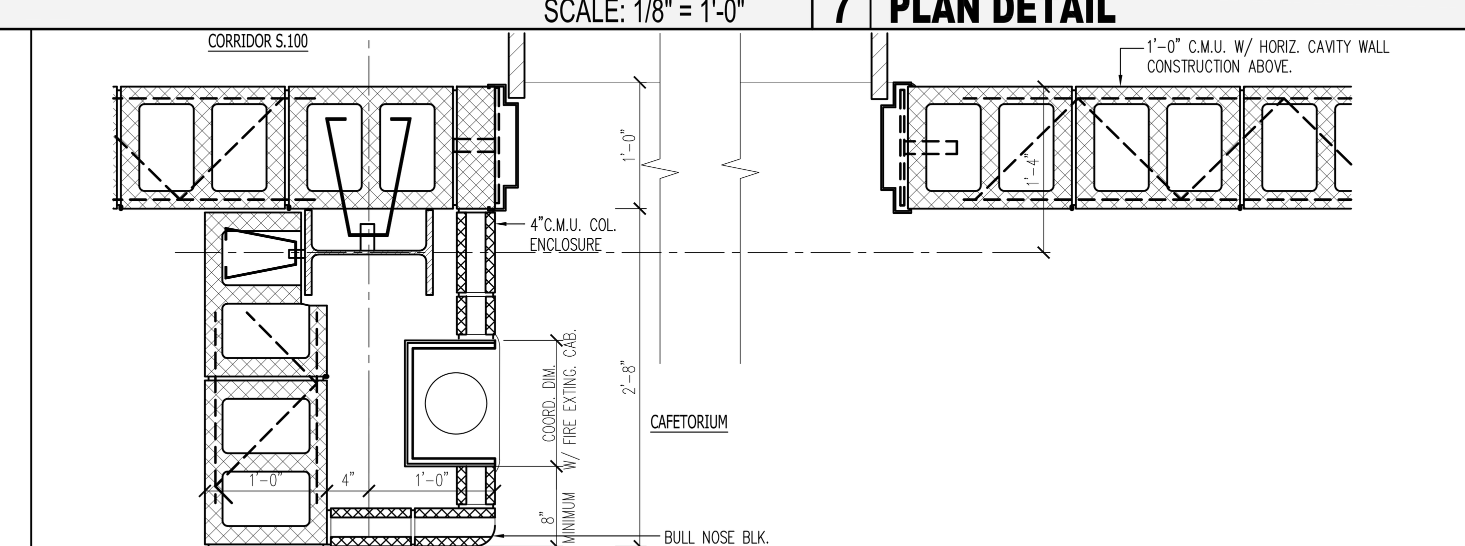

4 PLAN DETAIL

SCALE: 1" = 1'-0"

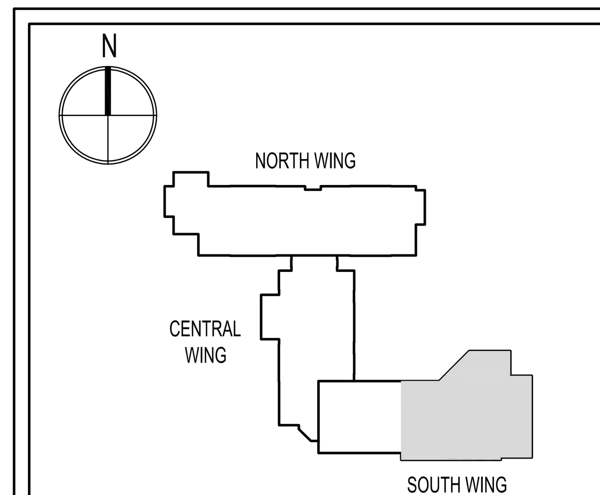

KEY PLAN

N.T.S.

SDA

NJ SCHOOLS DEVELOPMENT AUTHORITY

STATE OF NEW JERSEY

ECONOMIC DEVELOPMENT AUTHORITY

Design Ideas Group
architecture + planning, llc

15 Bethany Street
New Brunswick, NJ 08901
T: 732.249.6242
F: 732.247.1825

142 West 36th Street
New York, NY 10018
T: 645.584.8419

Richard D. Alderiso, AIA
NJ RA AI 15023 NY RA 027416

Vincent A. Myers, AIA
NJ RA AI 11415

Jeffrey D. Venezia, AIA
NJ RA AI 08271 NY RA 023719-1

Warren W. Winter, AIA
NJ RA AI 06853 NY RA 010562-1

CONSTRUCTION PROGRAM FOR THE

MARSHALL STREET ELEMENTARY SCHOOL

DOE# 4010-N01-02-0169
NJSDA# PA-0006-C04
DCA# OLCEHPC-05--013 ERU# 6095-05

ADDRESS

NJSDA
1 WEST STATE STREET
TRENTON, NEW JERSEY

PROJECT NO.: 2012-213.00

ISSUED
05/15/09 ISSUED FOR BID
07/06/09 ISSUED FOR BID
1 08/06/09 DCA REVIEW COMMENTS
2 03/03/10 DIMENSIONAL REVISIONS
9 12/17/12 SDA AMENDMENTS 11 & 12
10 03/25/13 ADDENDUM NO. 2

DRAWING TITLE

SOUTH WING
PARTIAL FIRST FLOOR PLAN

DRAWING No.

A-1.5

DWG. NO. 0 OF 0

Drawing name: P:\2012\2012-213.00 Marshall St Elementary - Restart\DRAWINGS\Condocs\A1_FLOOR PLANS\213-A1.5.dwg Plotted By: MFERRAGAMO Mar 25, 2013 - 5:56pm

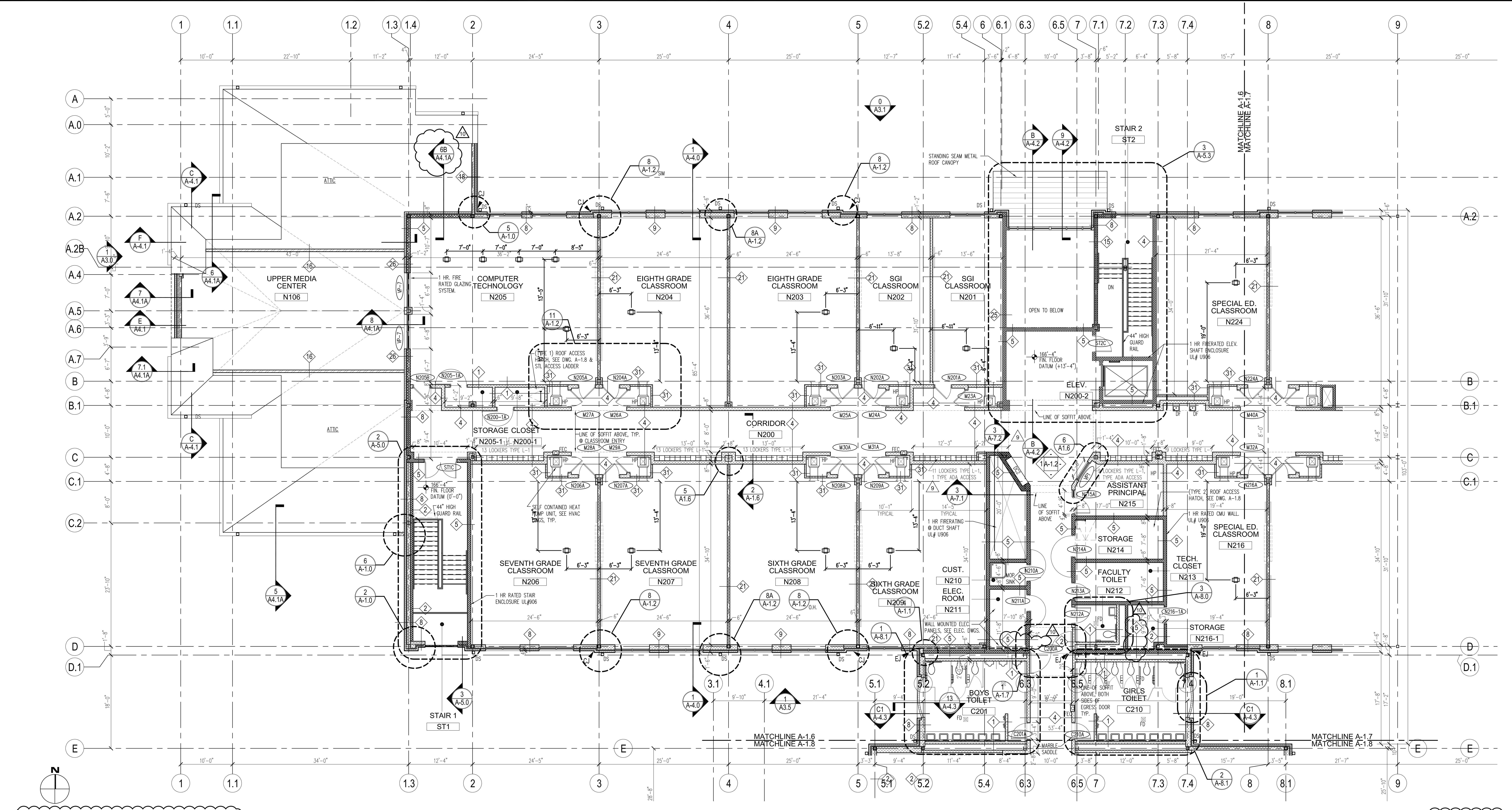

SECOND FLOOR PLAN - NORTH WING SCALE: 1/8" = 1'-0"

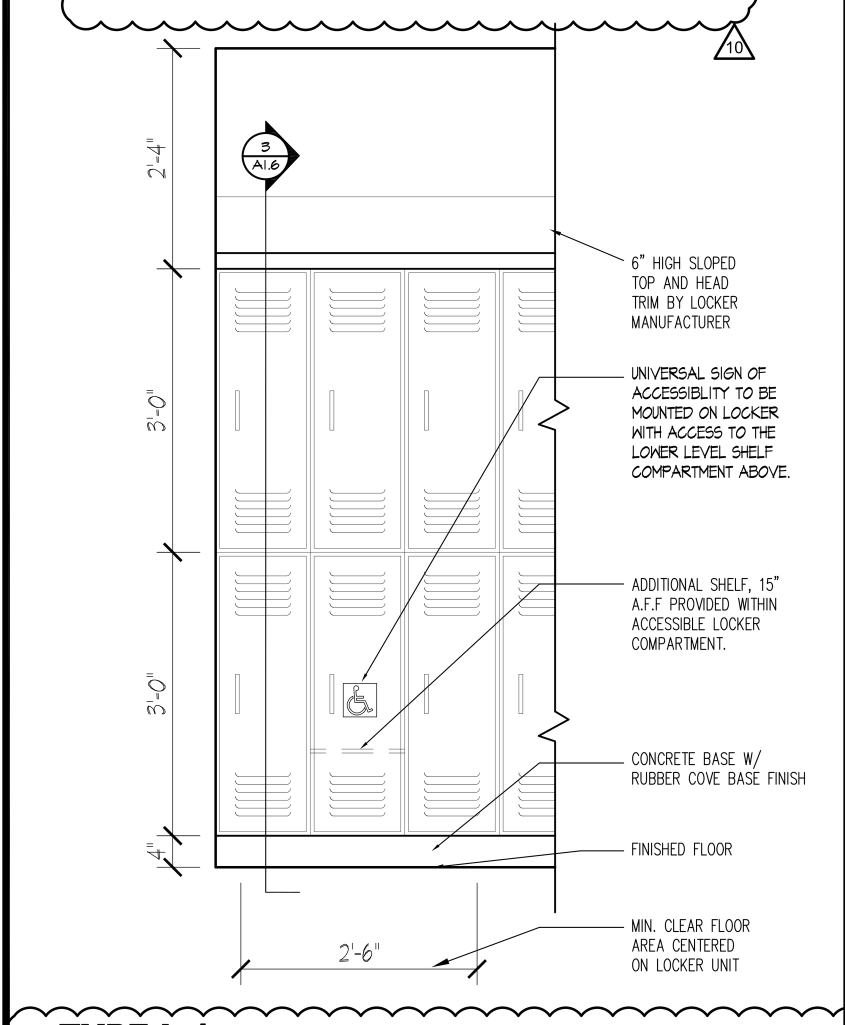

TYPE L-1
1 DETAIL ELEV @ HALL LOCKER SCALE: 3/4" = 1'-0"

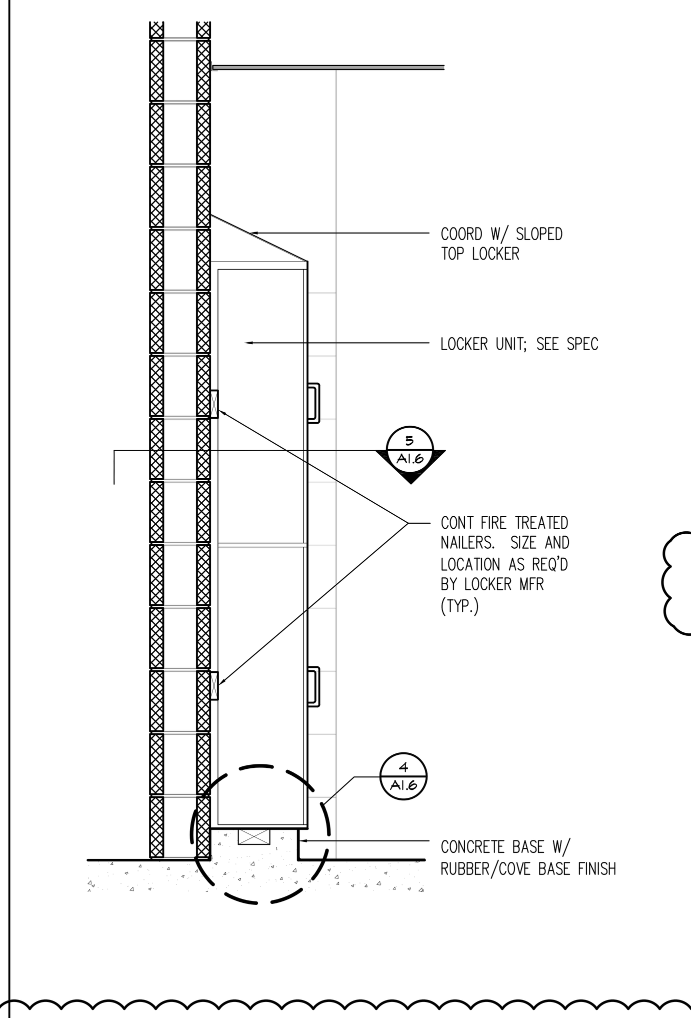

2 SECTION DETAIL SCALE: 3/4" = 1'-0"

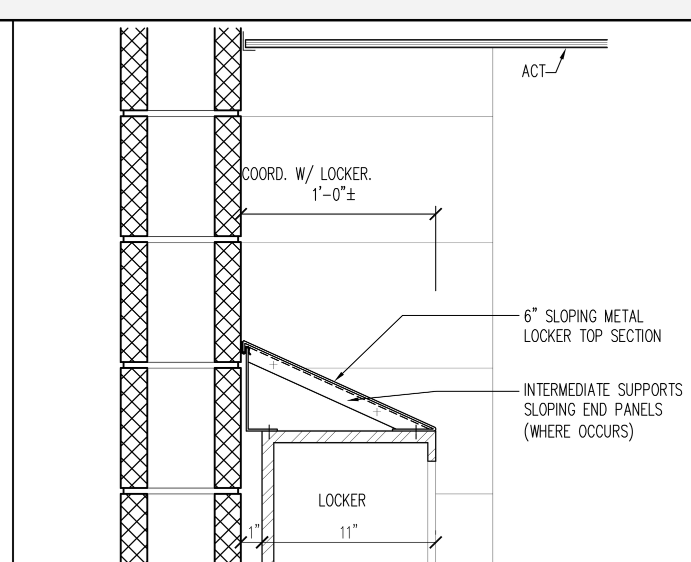

3 LOCKER HEAD DETAIL SCALE: 1-1/2" = 1'-0"

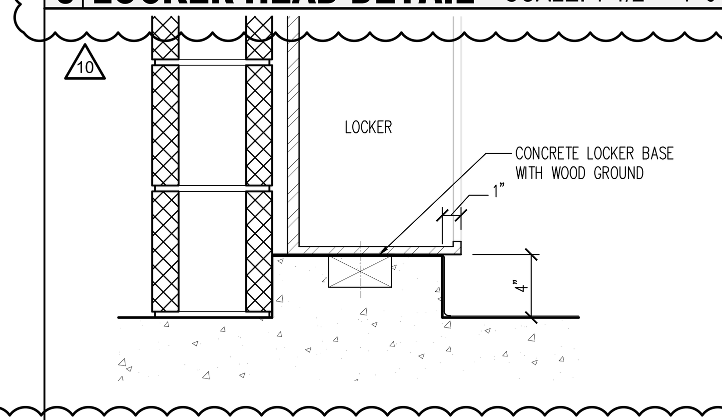

4 LOCKER BASE DETAIL SCALE: 1-1/2" = 1'-0"

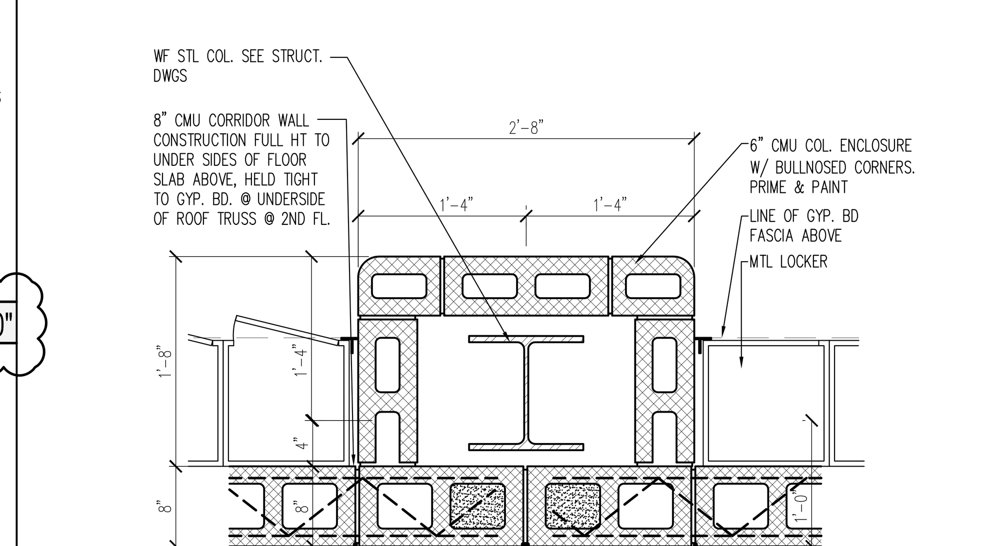

5 LOCKER PLAN DETAIL SCALE: 1" = 1'-0"

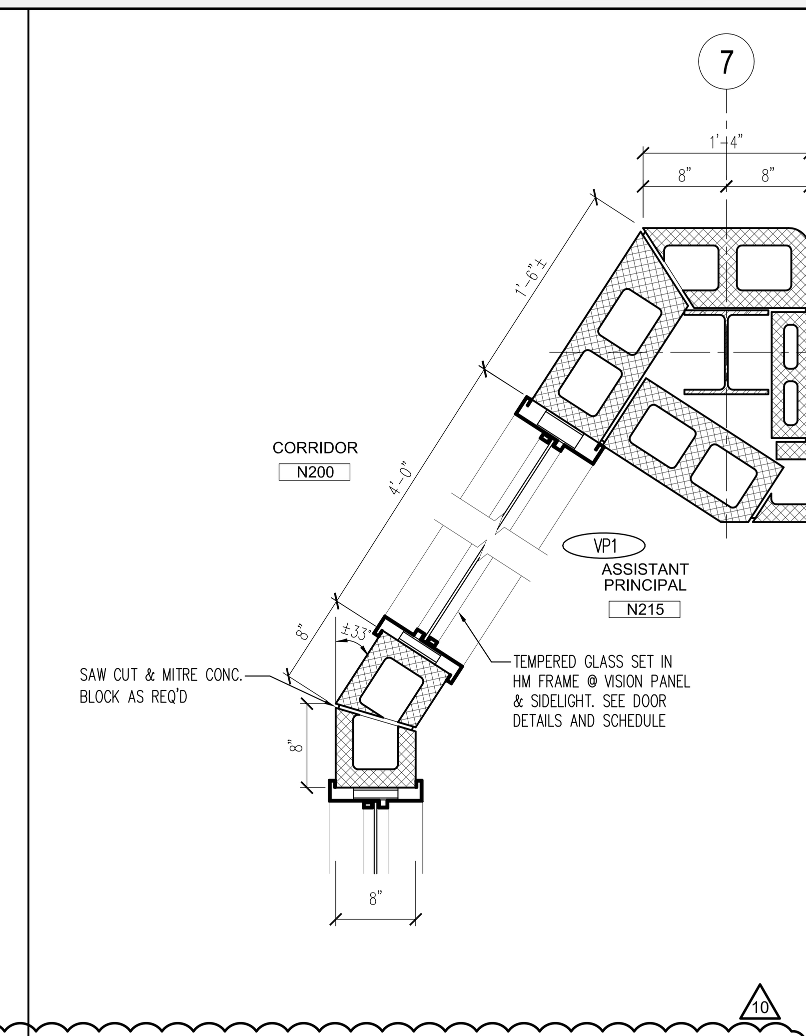

6 PLAN DETAIL SCALE: 1" = 1'-0"

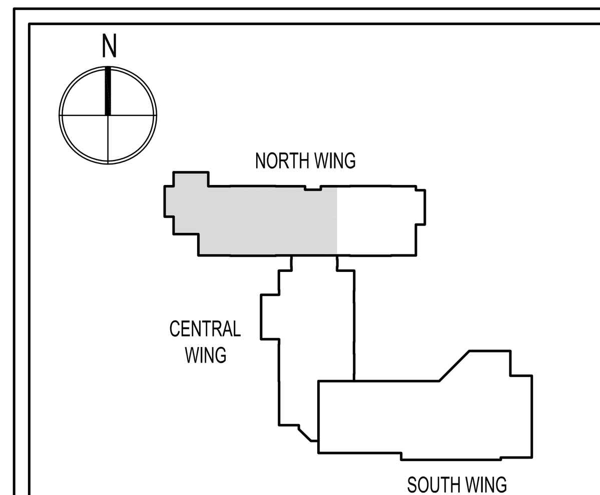

KEY PLAN N.T.S.

SDA
NJ Schools Development Authority

STATE OF NEW JERSEY

ECONOMIC DEVELOPMENT AUTHORITY

DesignIdeasGroup
architecture + planning, llc
15 Bethany Street
New Brunswick, NJ 08901
T: 732.249.6242
F: 732.247.1825
142 West 36th Street
New York, NY 10018
T: 645.584.8419

Richard D. Alderiso, AIA
NJ RA AI 15023 NY RA 027416

Vincent A. Myers, AIA
NJ RA AI 11415

Jeffrey D. Venezia, AIA
NJ RA AI 08271 NY RA 023719-1

Warren W. Winter, AIA
NJ RA AI 06853 NY RA 010562-1

CONSTRUCTION PROGRAM FOR THE
MARSHALL STREET ELEMENTARY SCHOOL
DOE# 4010-N01-02-0169
NJSDA# PA-0006-C04
DCA# OLCEHPC-05--013 ERU# 6095-05
ADDRESS
NJSDA
1 WEST STATE STREET
TRENTON, NEW JERSEY

PROJECT NO.: 2012-213.00

ISSUED
05/15/09 ISSUED FOR BID
07/06/09 ISSUED FOR BID
1 08/06/09 DCA REVIEW COMMENTS
9 12/17/12 SDA AMENDMENTS 11 & 12
10 03/25/13 ADDENDUM NO. 2

DRAWING TITLE
NORTH WING
PARTIAL SECOND FLOOR PLAN

DRAWING No.
A-1.6

DWG. NO. OF

Drawing name: P:\2012\2012-213.00 Marshall St Elementary - Restart\DRAWINGS\Condocs\A1_FLOOR PLANS\213-A1.6.dwg Plotted By: MFERRAGAMO Mar 25, 2013 - 5:55pm

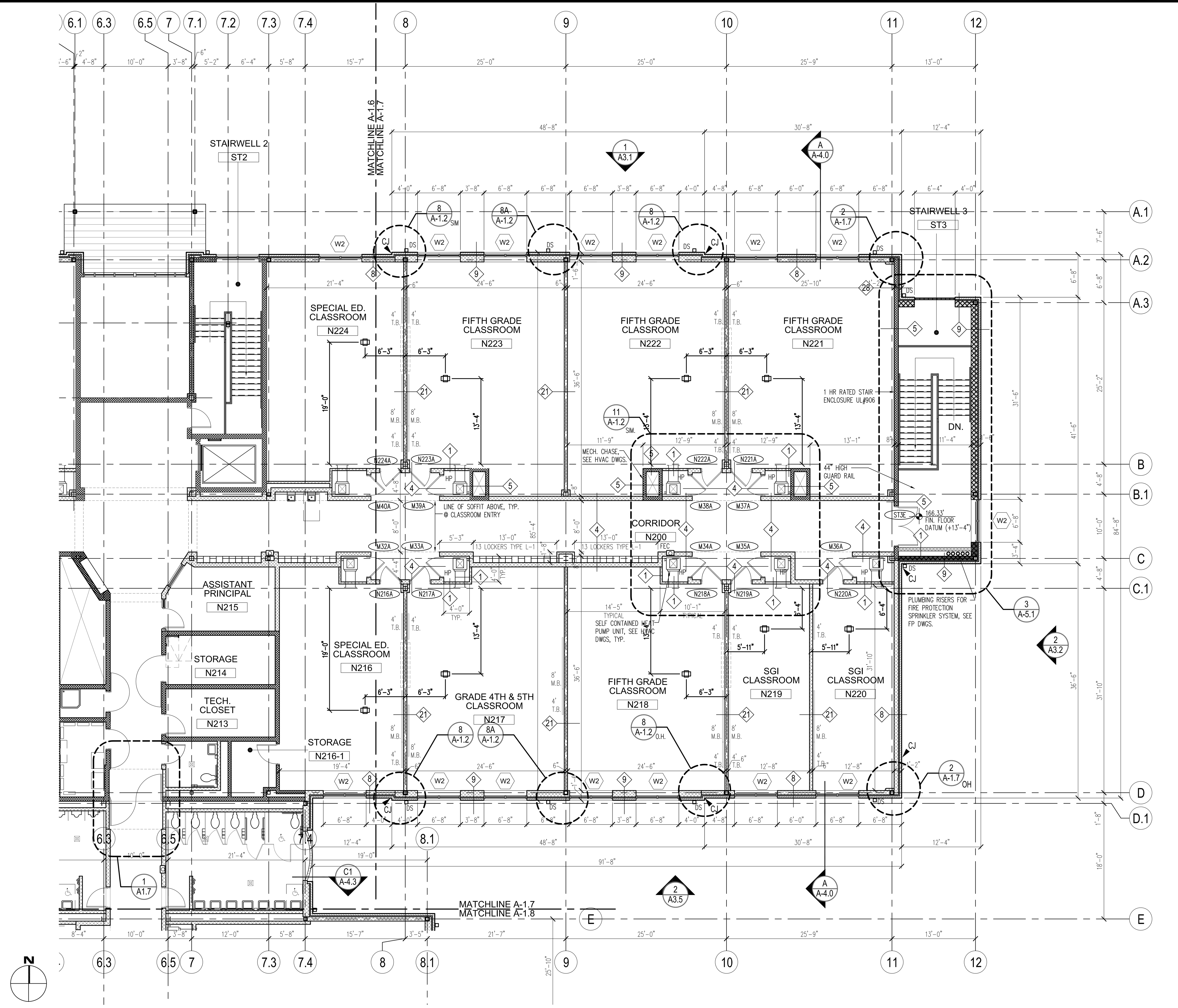

SECOND FLOOR PLAN - NORTH WING

SCALE: 1/8" = 1'-0"

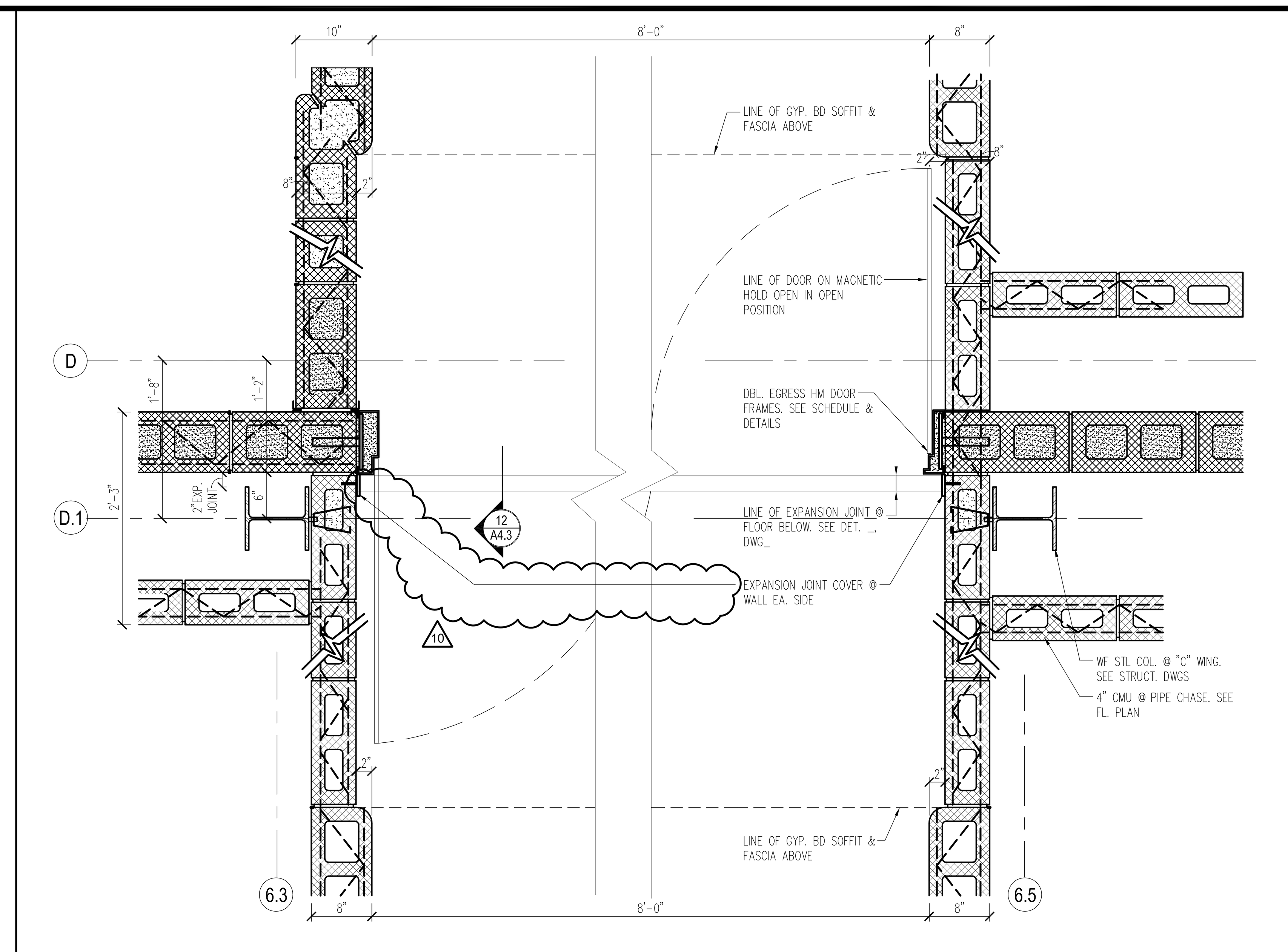

1 PLAN DETAIL SCALE: 1" = 1'-0"

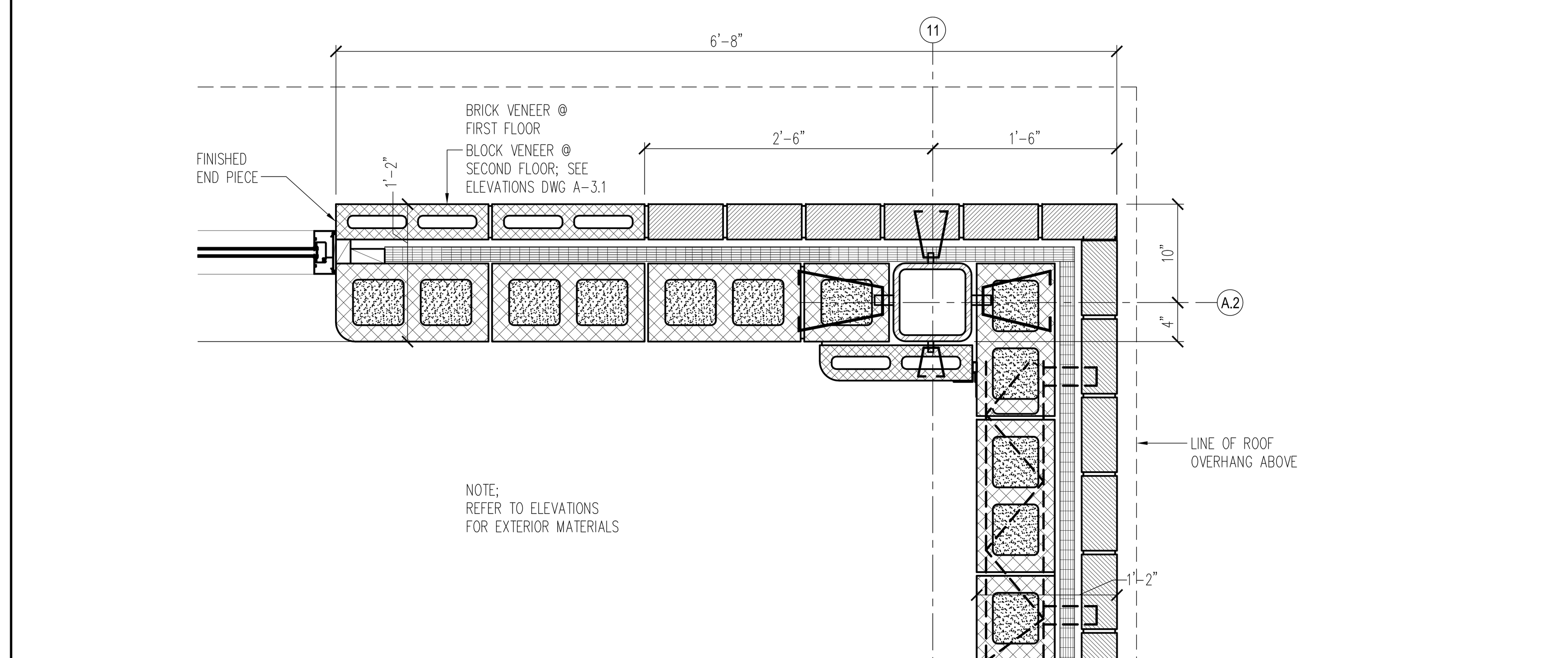

2 PLAN DETAIL SCALE: 1" = 1'-0"

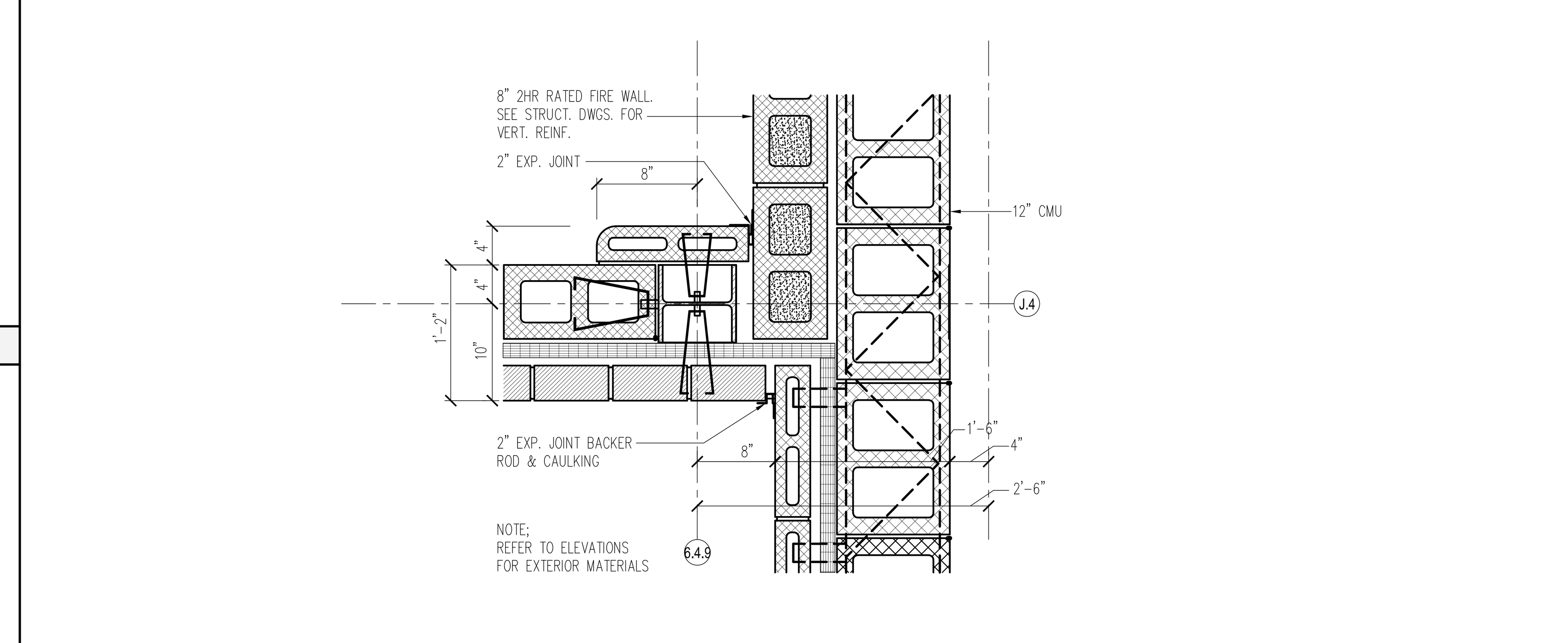

3 PLAN DETAIL SCALE: 1" = 1'-0"

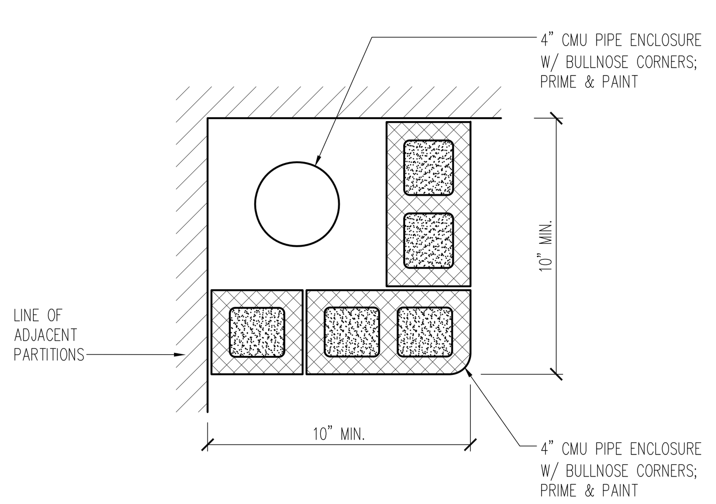

4 PLAN DETAIL SCALE: 1" = 1'-0"

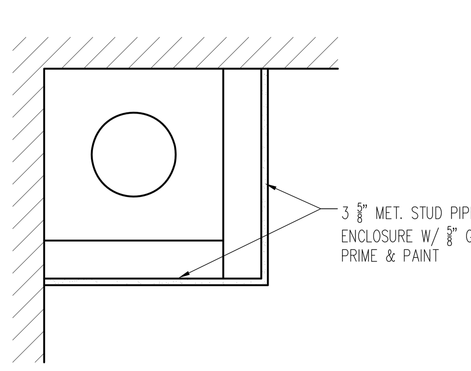

5 PLAN DETAIL SCALE: 1" = 1'-0"

NOTE FOR ALL PLAN DETAILS
REFER TO BLDG. ELEVATIONS ON A3 SERIES FOR EXTERIOR FINISHES & DIMENSIONS.

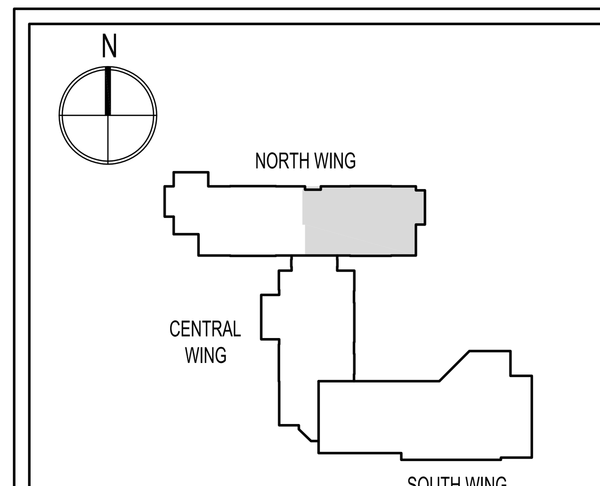

KEY PLAN N.T.S.

SDA
NJ SCHOOLS DEVELOPMENT AUTHORITY

STATE OF NEW JERSEY
ECONOMIC DEVELOPMENT AUTHORITY

Design Ideas Group
architecture + planning, llc
15 Bethany Street
New Brunswick, NJ 08901
T: 732.249.6242
F: 732.247.1825
142 West 36th Street
New York, NY 10018
T: 645.584.8419

Richard D. Alderiso, AIA
NJ RA AI 15023 NY RA 027416
Vincent A. Myers, AIA
NJ RA AI 11415
Jeffrey D. Venezia, AIA
NJ RA AI 06271 NY RA 023719-1
Warren W. Winter, AIA
NJ RA AI 06853 NY RA 010562-1

CONSTRUCTION PROGRAM FOR THE
MARSHALL STREET ELEMENTARY SCHOOL
DOE# 4010-N01-02-0169
NJSDA# PA-0006-C04
DCA# OLCEHPC-05--013 ERU# 6095-05
ADDRESS
NJSDA
1 WEST STATE STREET
TRENTON, NEW JERSEY

PROJECT NO.: 2012-213.00

ISSUED
05/15/09 ISSUED FOR BID
07/06/09 ISSUED FOR BID
1 08/06/09 DCA REVIEW COMMENTS
9 12/17/12 SDA AMENDMENTS 11 & 12
10 03/25/13 ADDENDUM NO. 2

DRAWING TITLE
NORTH WING
PARTIAL SECOND FLOOR PLAN

DRAWING No.
A-1.7

DWG. NO. 0 OF 0

Drawing name: P:\2012\2012-213.00 Marshall St Elementary - Restart\DRAWINGS\Condocs\A1_FLOOR PLANS\213-A1.7.dwg Plotted By: MFERRAGAMO Mar 25, 2013 - 5:54pm

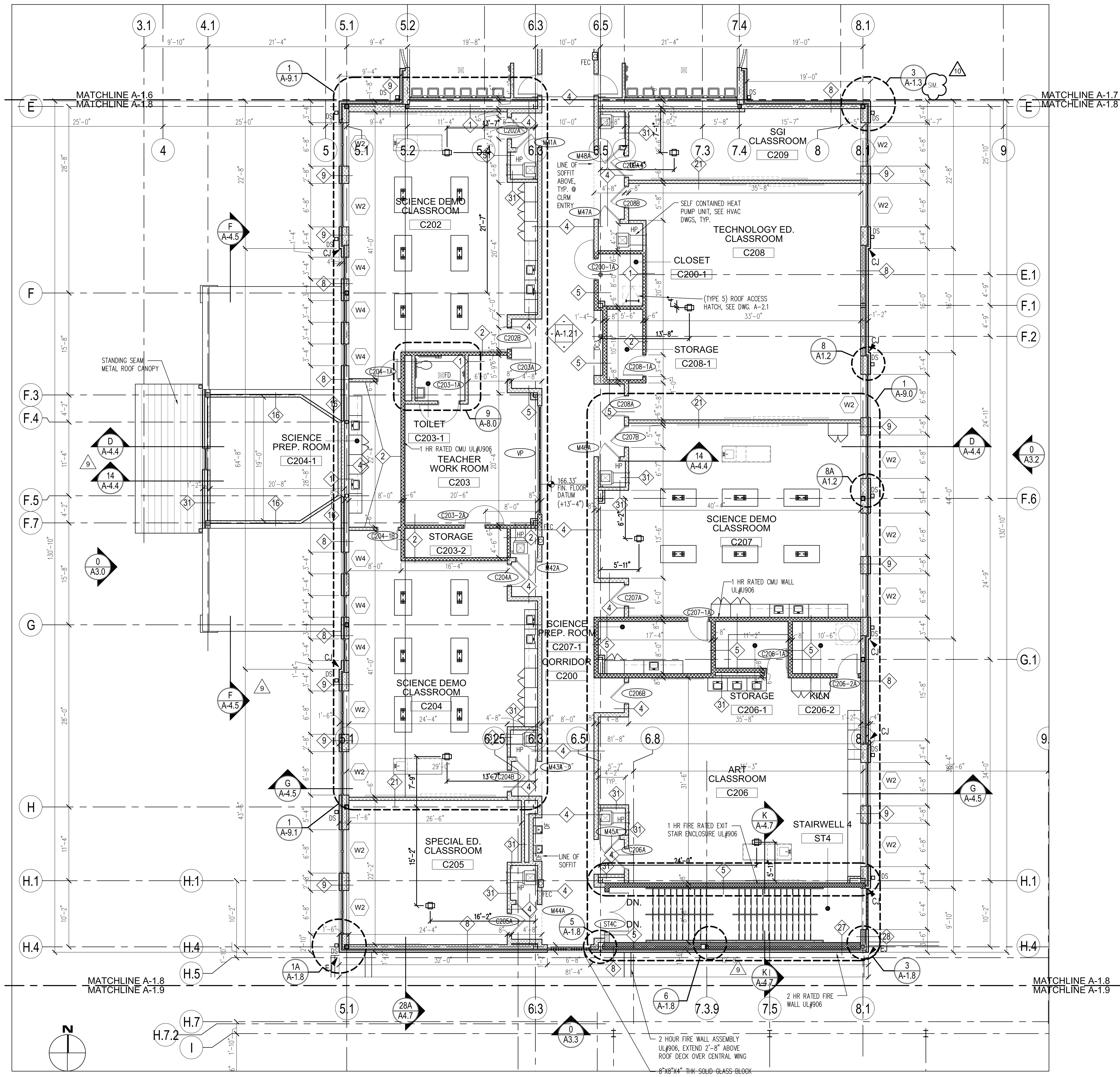

SECOND FLOOR PLAN - CENTRAL WING SCALE: 1/8" = 1'-0"

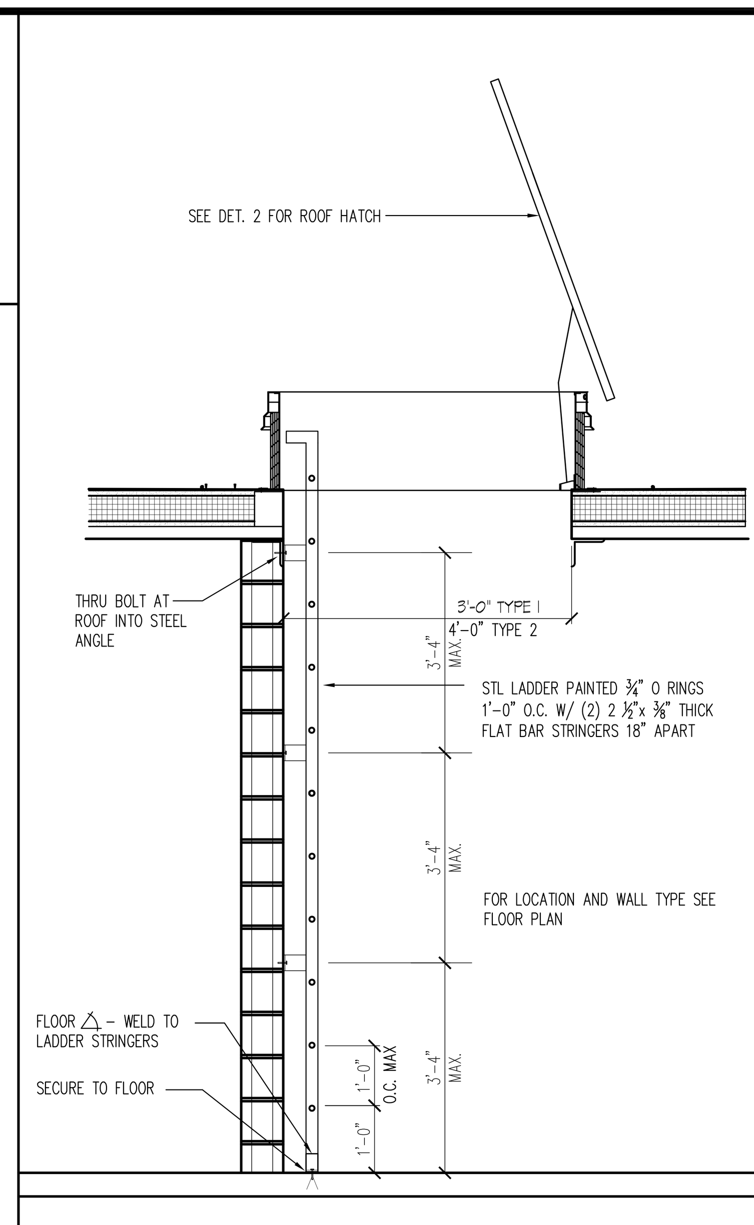

1 DETAIL INT ROOF LADDER SCALE: 1/2" = 1'-0"

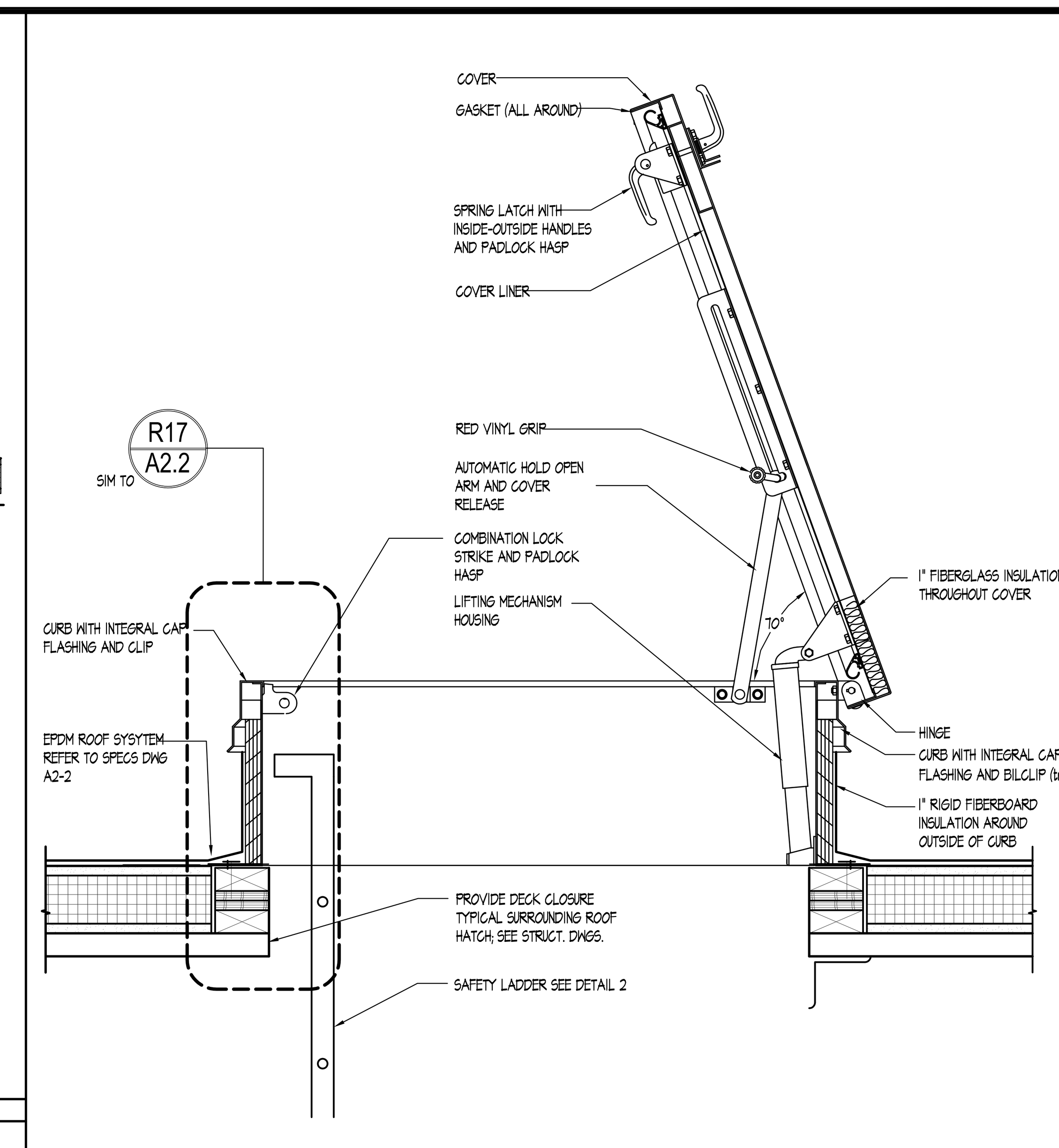

2 DETAIL @ ROOF HATCH SCALE: 1" = 1'-0"

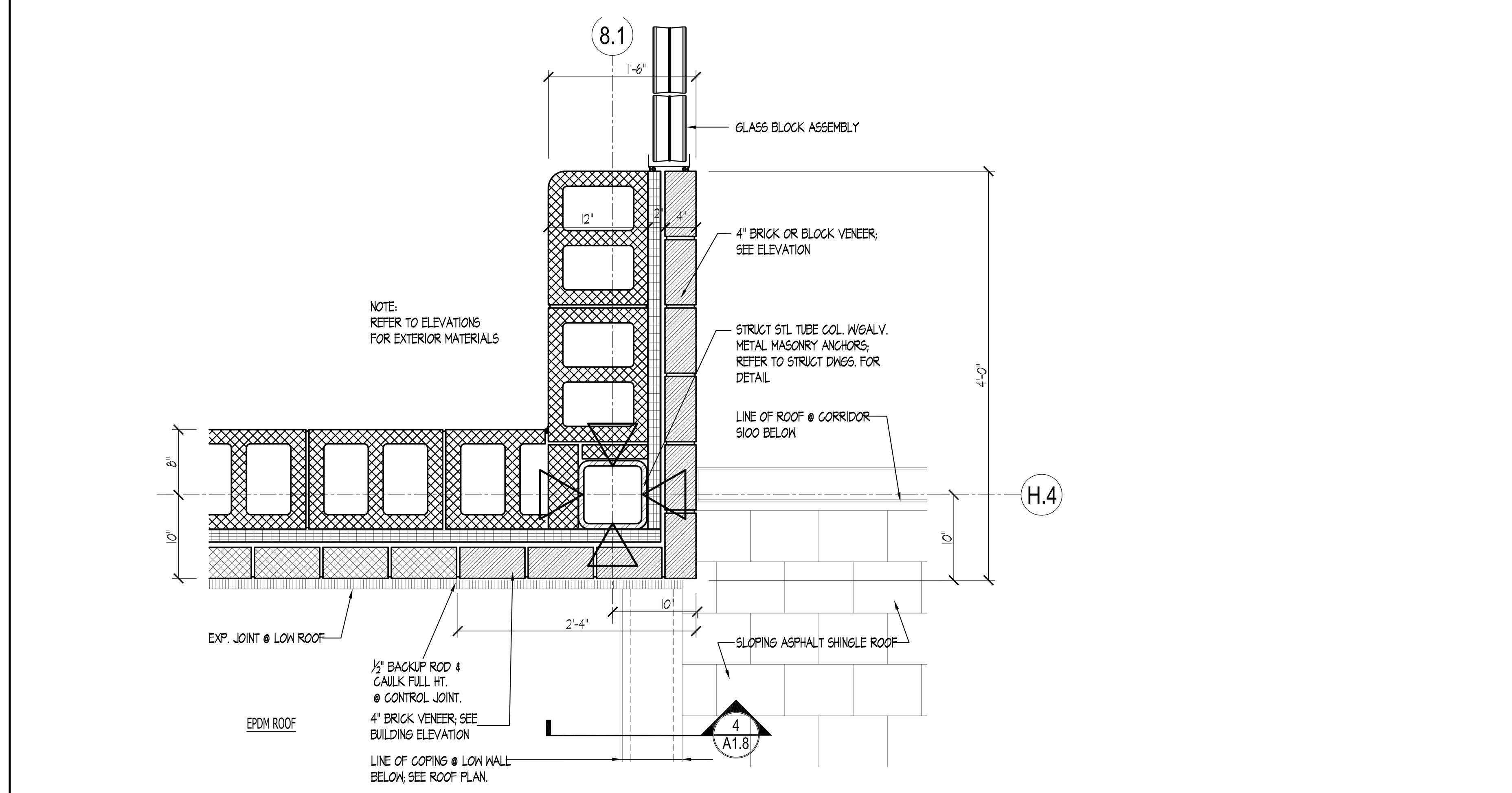

3 PLAN DETAIL SCALE: 1" = 1'-0"

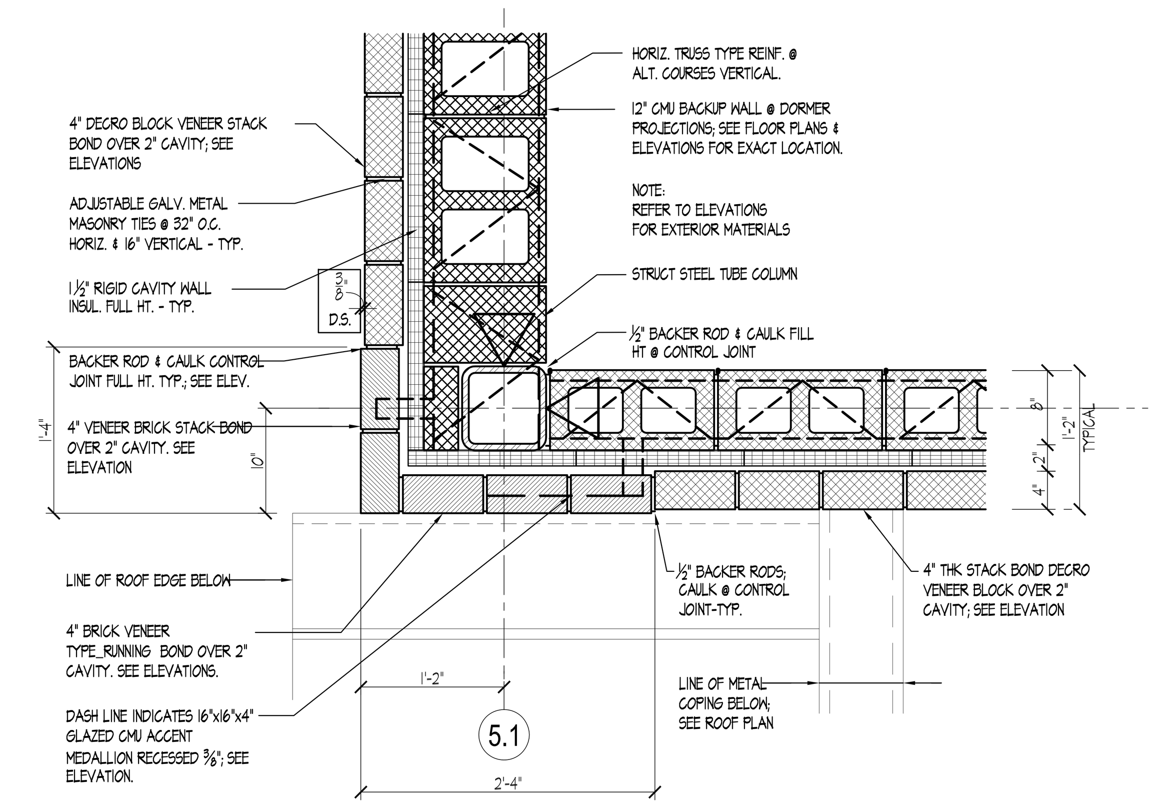

REFER TO PLAN DETAIL 1, DWG A1.3 FOR CONDITION @ 1ST FLR.

1A PLAN DETAIL - SCALE: 1" = 1'-0"

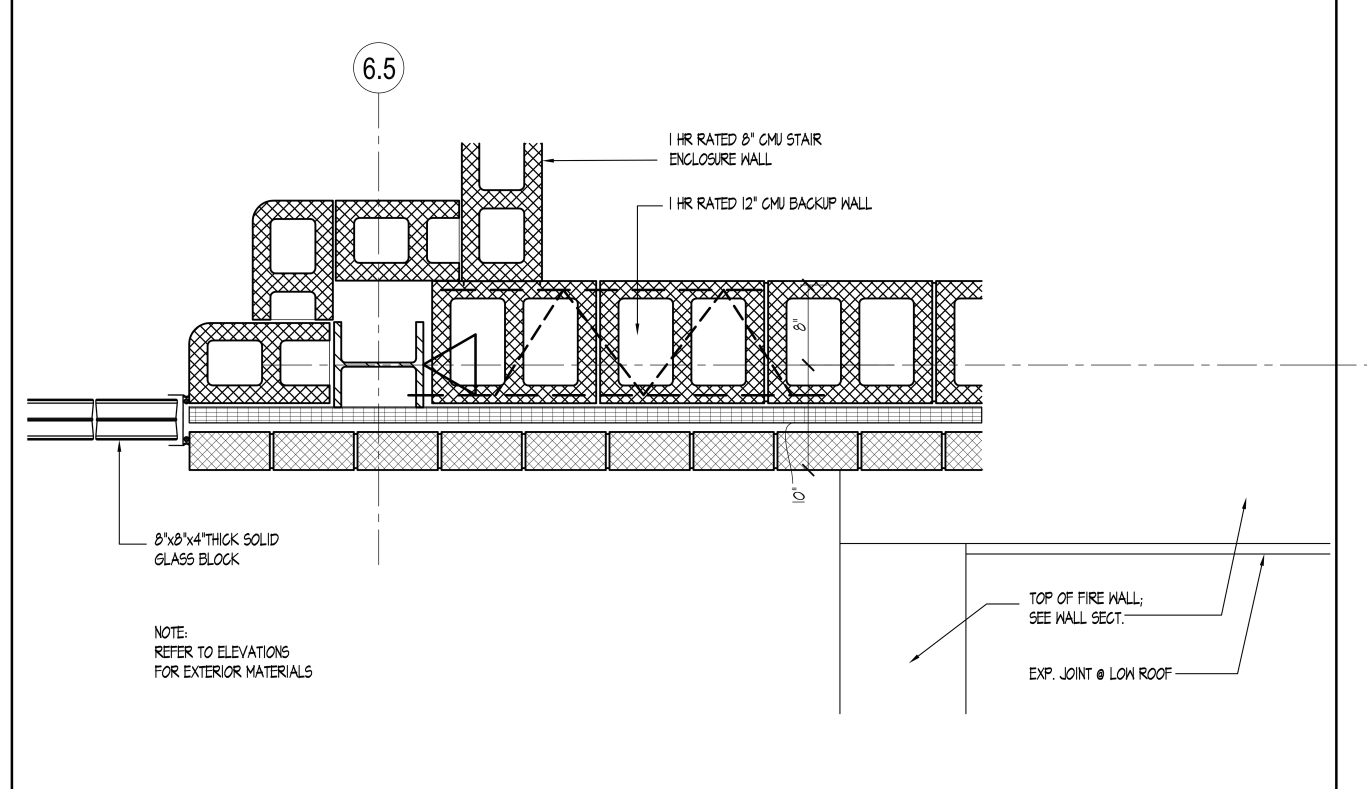

5 PLAN DETAIL - SCALE: 1" = 1'-0"

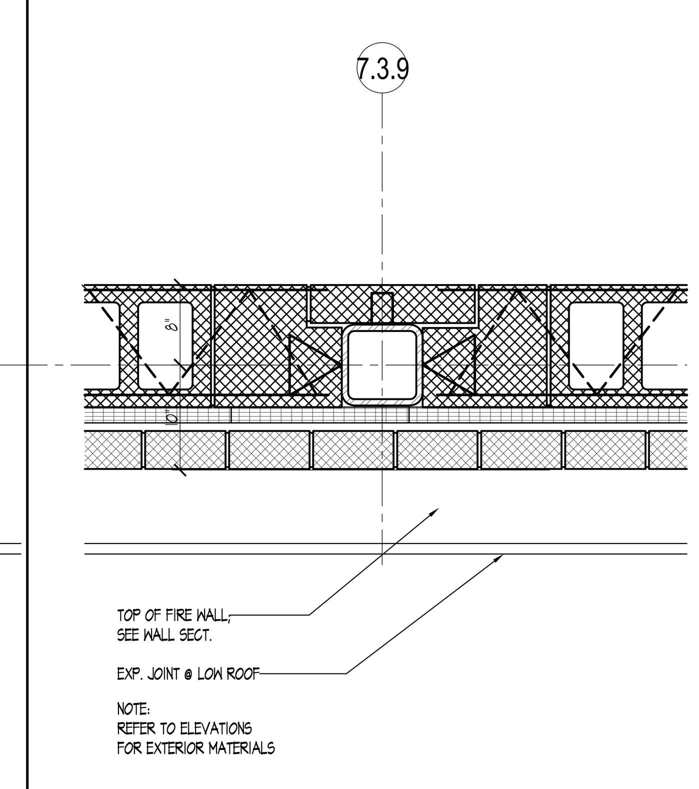

6 PLAN DETAIL - SCALE: 1" = 1'-0"

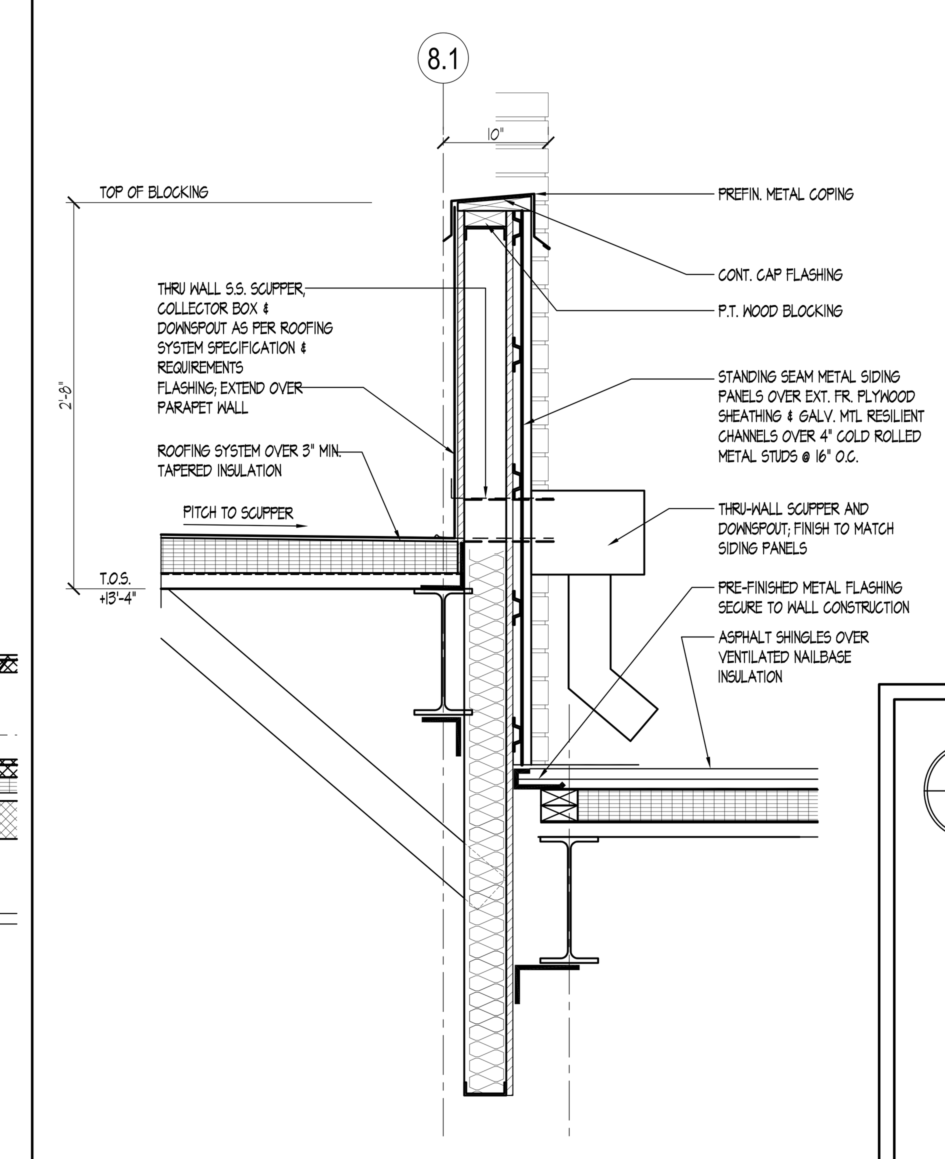

4 PARTIAL SECTION / DETAIL SCALE: 1" = 1'-0"

NOTE FOR ALL PLAN DETAILS
REFER TO BLDG. ELEVATIONS ON A3 SERIES FOR EXTERIOR FINISHES & DIMENSIONS.

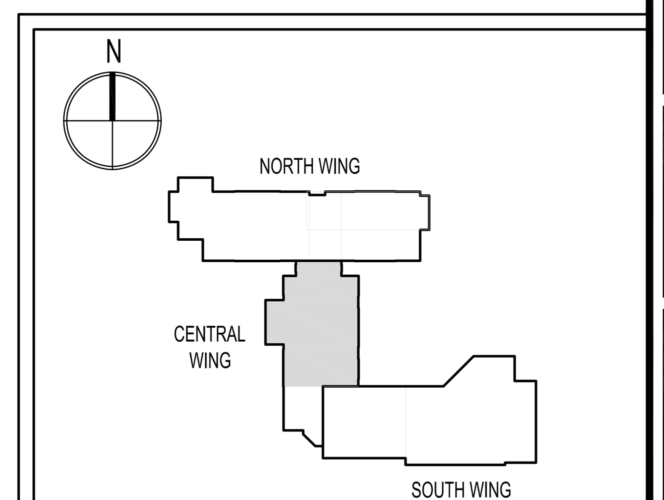

KEY PLAN N.T.S.

SDA
NJ Schools Development Authority
STATE OF NEW JERSEY
ECONOMIC DEVELOPMENT AUTHORITY

DesignIdeasGroup
architecture + planning, llc
15 Bethany Street
New Brunswick, NJ 08901
T: 732.249.6242
F: 732.247.1825
142 West 36th Street
New York, NY 10018
T: 645.584.8419
Richard D. Alderiso, AIA NJ RA AI 15023 NY RA 027416
Vincent A. Myers, AIA NJ RA AI 11415
Jeffrey D. Venezia, AIA NJ RA AI 08271 NY RA 023719-1
Warren W. Winter, AIA NJ RA AI 06853 NY RA 010562-1

CONSTRUCTION PROGRAM FOR THE
MARSHALL STREET ELEMENTARY SCHOOL
DOE# 4010-N01-02-0169
NJSDA# PA-0006-C04
DCA# OLCEHPC-05--013 ERU# 6095-05

ADDRESS
NJSDA
1 WEST STATE STREET
TRENTON, NEW JERSEY

PROJECT NO.: 2012-213.00

ISSUED
05/15/09 ISSUED FOR BID
07/06/09 ISSUED FOR BID
8 08/06/09 DCA REVIEW COMMENTS
9 12/17/12 SDA AMENDMENTS 11 & 12
10 03/25/13 ADDENDUM NO. 2

DRAWING TITLE
CENTRAL WING
PARTIAL SECOND FLOOR PLAN

DRAWING No.
A-1.8

DWG. NO. 0 OF 0

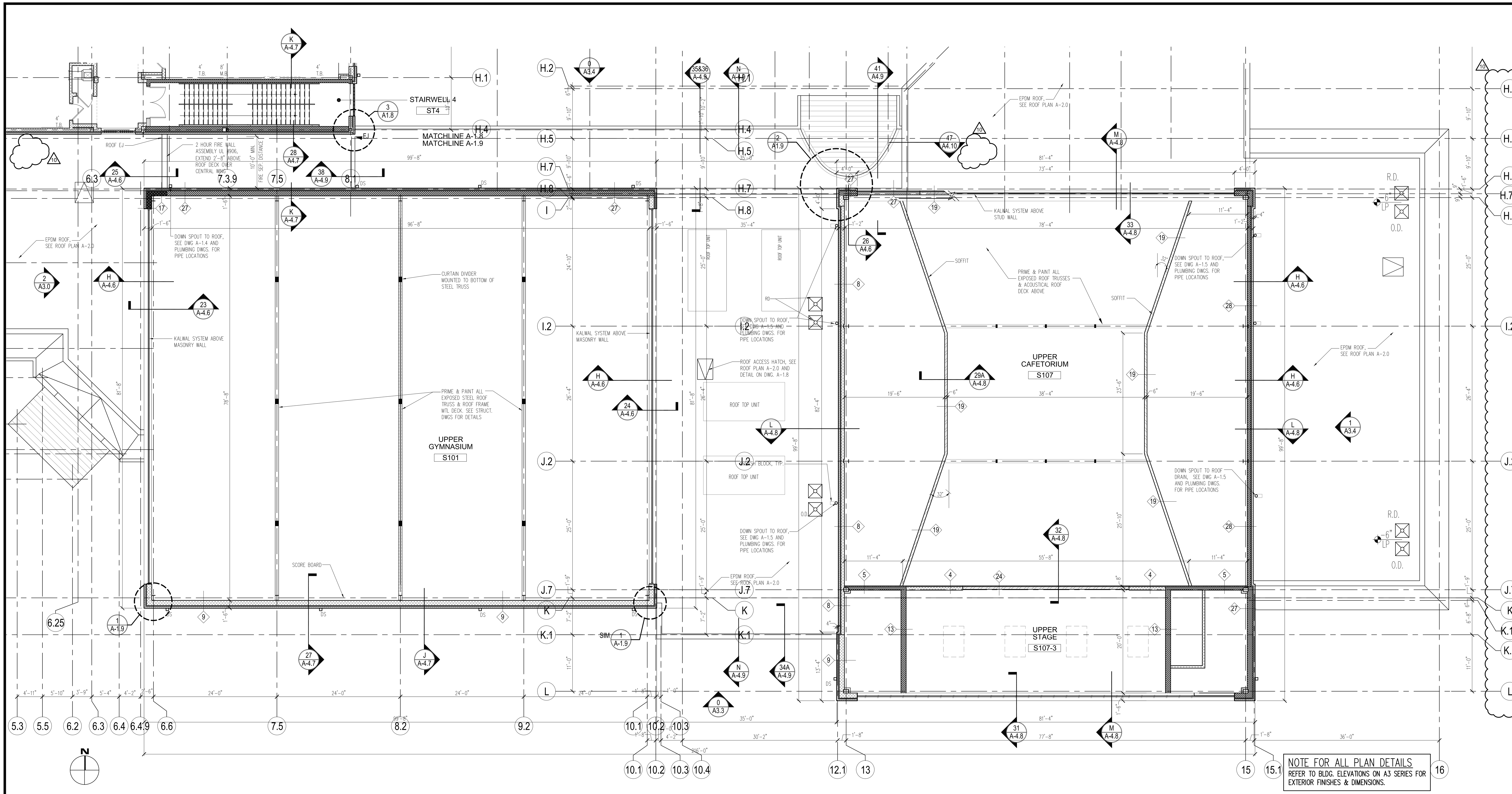

NOTE FOR ALL PLAN DETAILS
REFER TO BLDG. ELEVATIONS ON A3 SERIES FOR EXTERIOR FINISHES & DIMENSIONS.

UPPER FIRST FLOOR PLAN - SOUTH WING

SCALE: 1/8" = 1'-0"

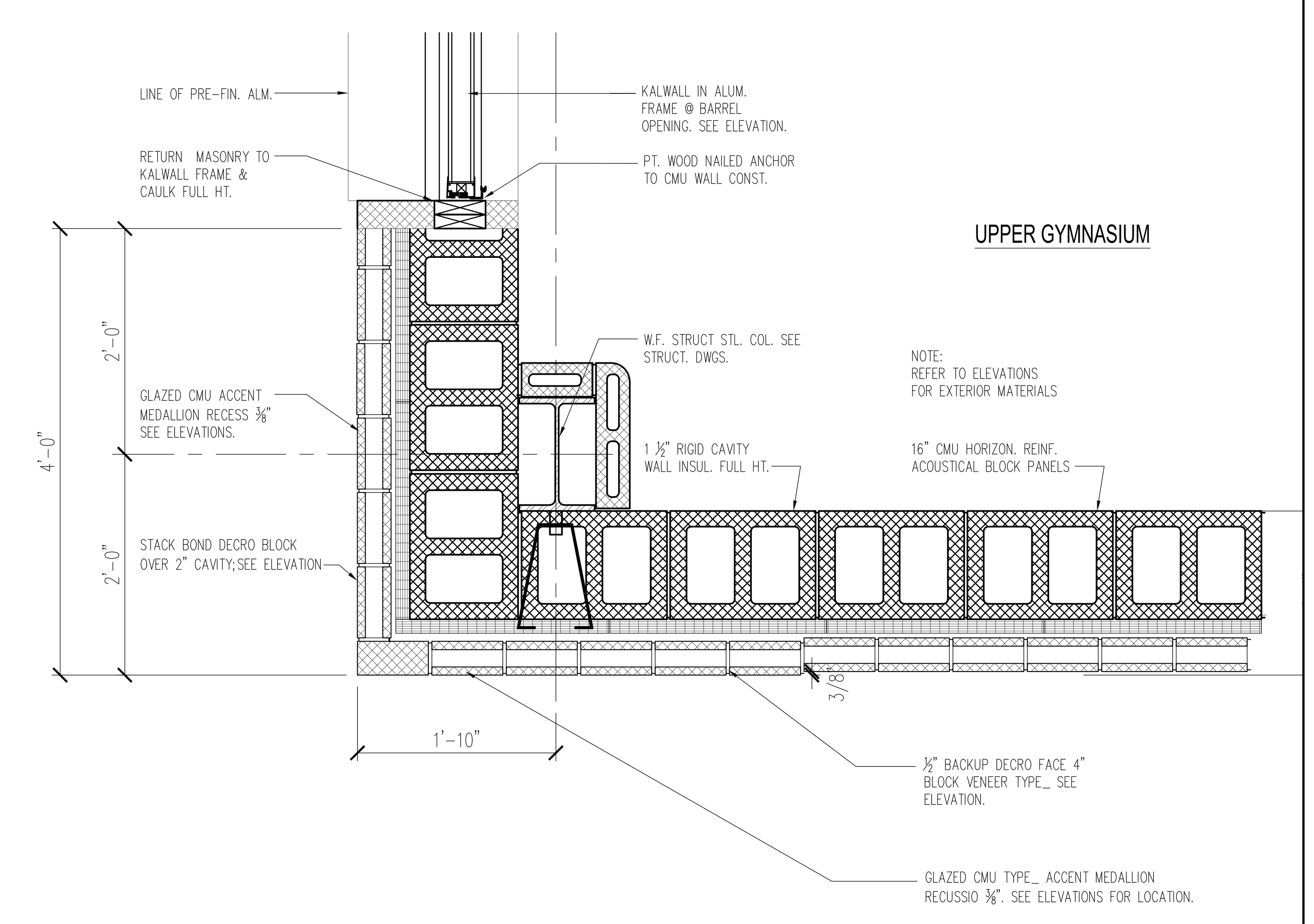

1 | PLAN DETAIL - SIM. OPP. SIDE - SEE PLAN DETAIL 7 DWG. A1.4 FOR CONDTION BELOW — SCALE: 1" = 1'-0"

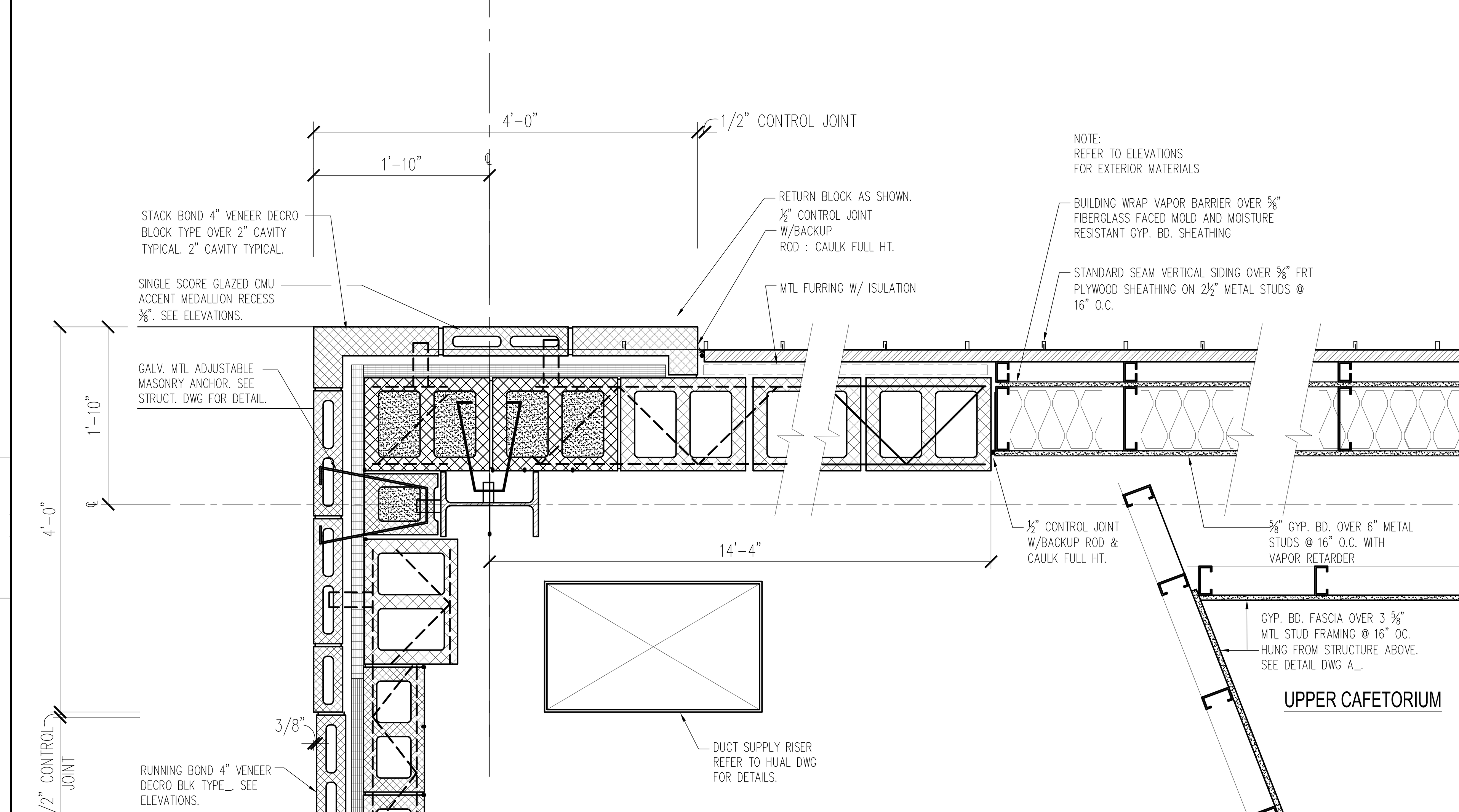

2 | PLAN DETAIL — SCALE: 1" = 1'-0"

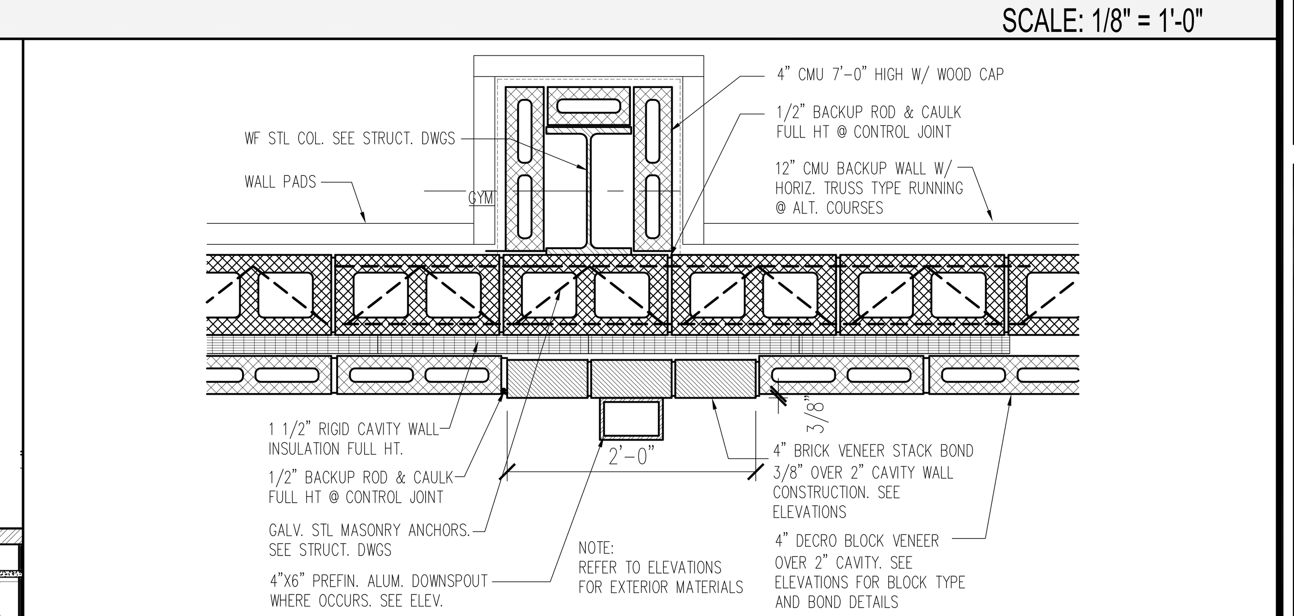

3 PLAN DETAIL SCALE: 1" = 1'-0"

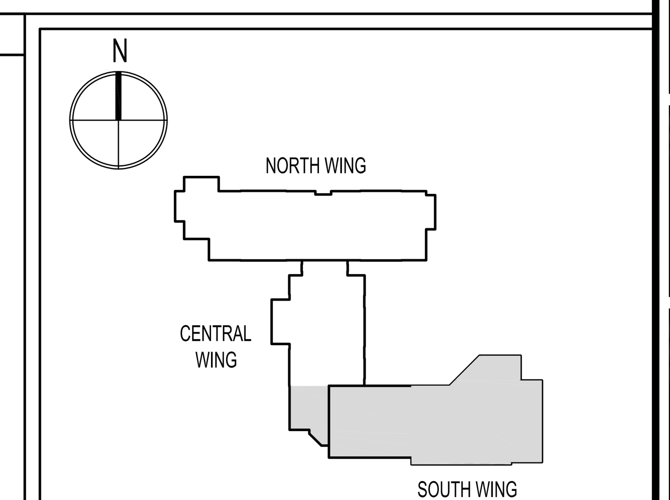

KEY PLAN — N.T.S.

SDA
NJ SCHOOLS DEVELOPMENT AUTHORITY

STATE OF NEW JERSEY
ECONOMIC DEVELOPMENT AUTHORITY

DesignIdeasGroup
architecture + planning, llc
15 Bethany Street, New Brunswick, NJ 08901
T: 732.249.6242
F: 732.247.1825
142 West 36th Street, New York, NY 10018
T: 645.584.8419

Richard D. Alderiso, AIA — NJ RA AI 15023 NY RA 027416
Vincent A. Myers, AIA — NJ RA AI 11415
Jeffrey D. Venezia, AIA — NJ RA AI 08271 NY RA 023719-1
Warren W. Winter, AIA — NJ RA AI 06853 NY RA 010562-1

CONSTRUCTION PROGRAM FOR THE
MARSHALL STREET ELEMENTARY SCHOOL
DOE# 4010-N01-02-0169
NJSDA# PA-0006-C04
DCA# OLCEHPC-05--013 ERU# 6095-05

ADDRESS
NJSDA
1 WEST STATE STREET
TRENTON, NEW JERSEY

PROJECT NO.: 2012-213.00

ISSUED
05/15/09 ISSUED FOR BID
07/06/09 ISSUED FOR BID
1 08/06/09 DCA REVIEW COMMENTS
9 12/17/12 SDA AMENDMENTS 11 & 12
10 03/25/13 ADDENDUM NO. 2

DRAWING TITLE
SOUTH WING
UPPER GYMNASIUM
& CAFETORIUM

DRAWING No.
A-1.9

DWG. NO. 0 OF 0

Drawing name: P:\2012\2012-213.00 Marshall St Elementary - Restart\DRAWINGS\Condocs\A1_FLOOR PLANS\213-A1.9.dwg Plotted By: MFERRAGAMO Mar 25, 2013 - 5:56pm

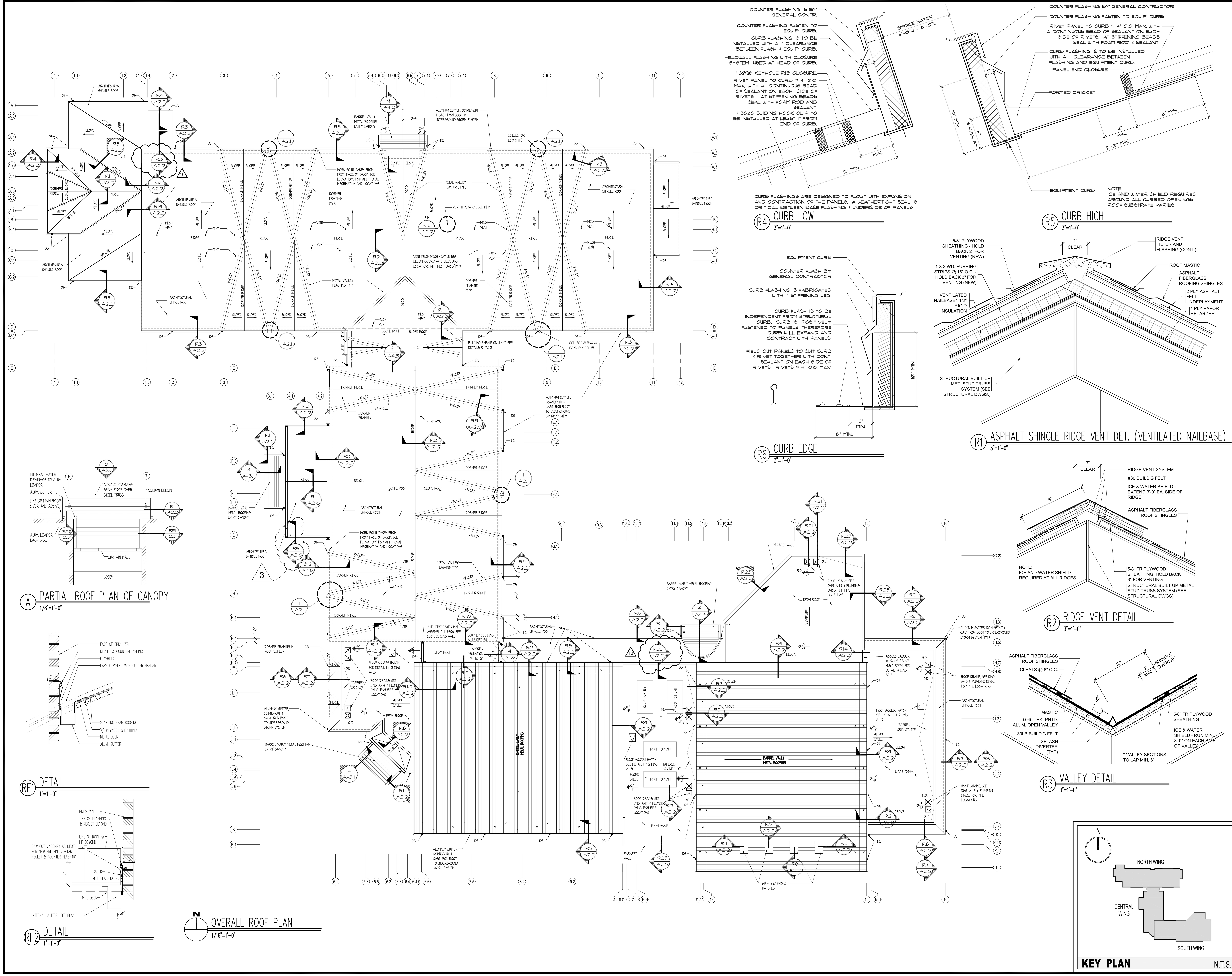

SDA

NJ SCHOOLS DEVELOPMENT AUTHORITY

STATE OF NEW JERSEY

ECONOMIC DEVELOPMENT AUTHORITY

DesignIdeasGroup architecture + planning, llc

15 Bethany Street
New Brunswick, NJ 08901
T: 732.249.6242
F: 732.247.1825

142 West 36th Street
New York, NY 10018
T: 645.584.8419

Richard D. Alderiso, AIA
NJ RA AI 15023 NY RA 027416

Vincent A. Myers, AIA
NJ RA AI 11415

Jeffrey D. Venezia, AIA
NJ RA AI 06271 NY RA 023719-1

Warren W. Winter, AIA
NJ RA AI 06853 NY RA 010562-1

CONSTRUCTION PROGRAM FOR THE

MARSHALL STREET ELEMENTARY SCHOOL

DOE# 4010-N01-02-0169
NJSDA# PA-0006-C04
DCA# OLCEHPC-05--013 ERU# 6095-05

ADDRESS
NJSDA
1 WEST STATE STREET
TRENTON, NEW JERSEY

PROJECT NO.: 2012-213.00

ISSUED

05/15/09 ISSUED FOR BID
07/06/09 ISSUED FOR BID
1 08/06/09 DCA REVIEW COMMENTS
3 08/24/09 REVISED PER ADD. No. 3
9 12/17/12 SDA AMENDMENTS 11 & 12
10 03/25/13 ADDENDUM NO. 2

DRAWING TITLE

ROOF PLAN

DRAWING No.

A-2.0

DWG. NO. OF

(0) OVERALL WEST ELEVATION
N.T.S.

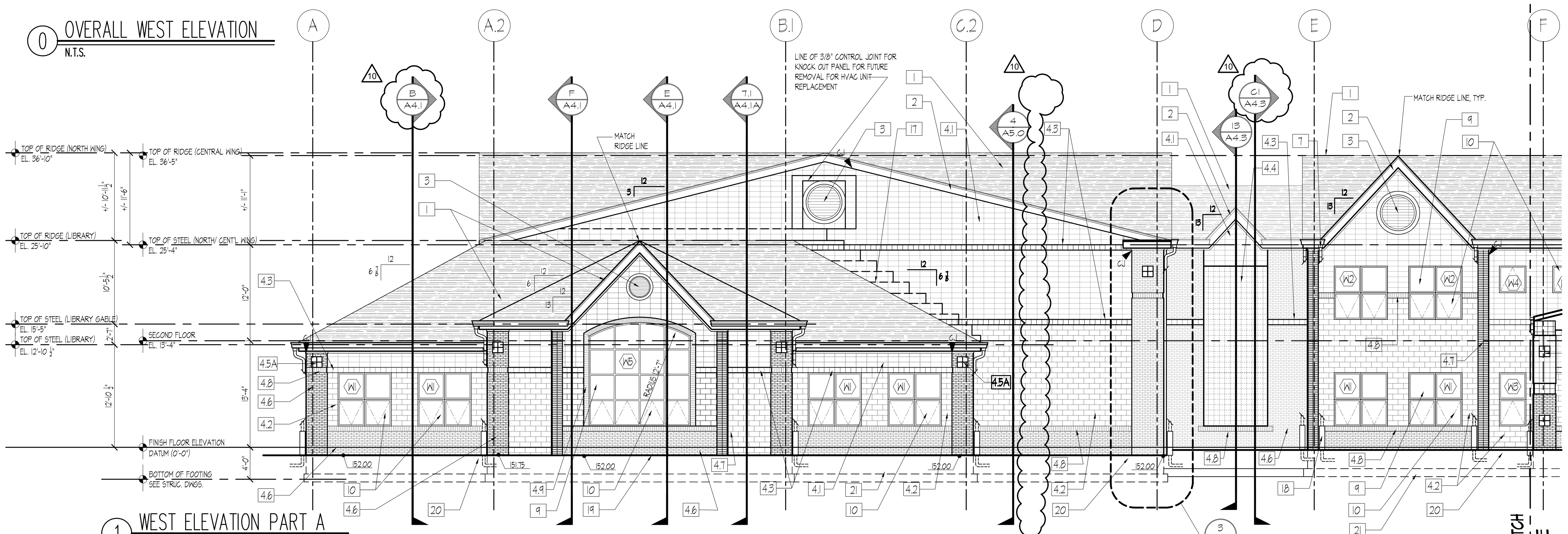

(1) WEST ELEVATION PART A
1/8"=1'-0"

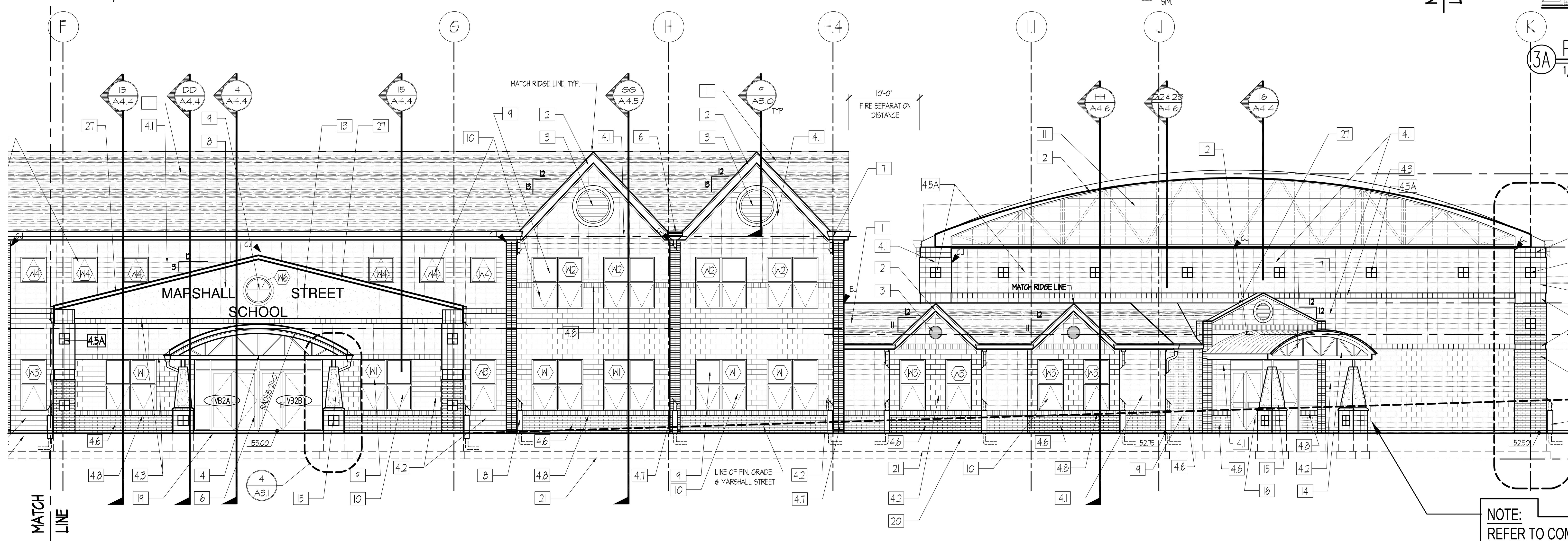

NOTE:
REFER TO COMMUNITY ENTRY PLAZA PANS & DETAILS DWG A-0.6 FOR ALL ARCHITECTURAL RETAINING WALLS & STAIR & ACCESIBLE RAMP FOR THIS AREA

(2) WEST ELEVATION PART B
1/8"=1'-0"

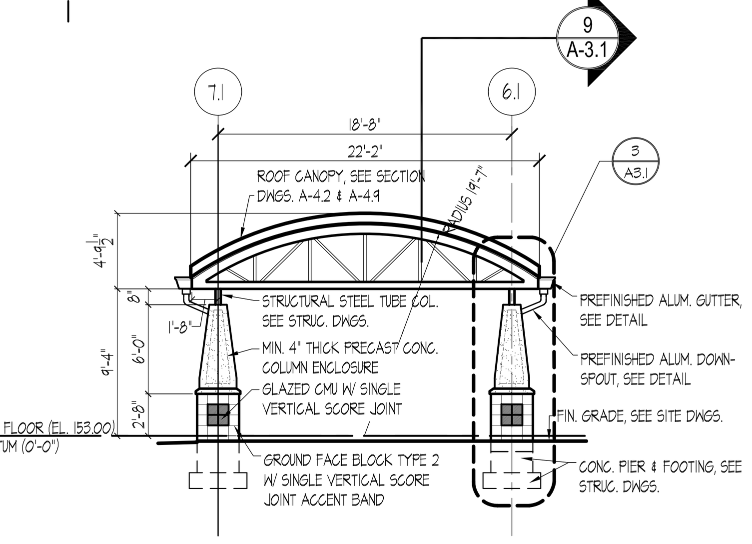

(3) DETAIL ELEVATION @ NORTH ENTRY CANOPY
1/8"=1'-0"

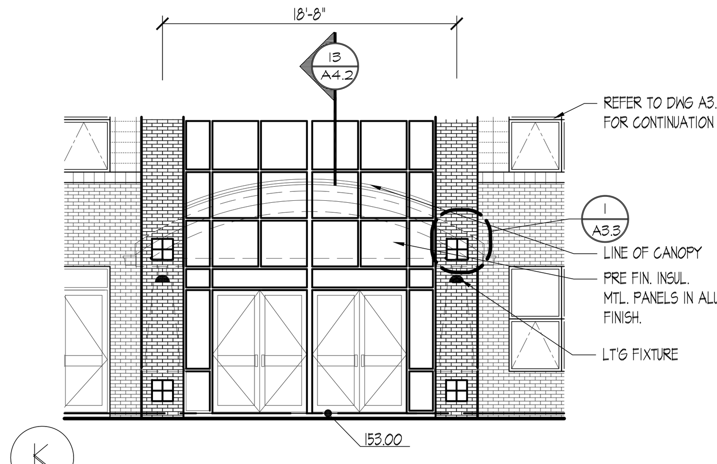

(3A) PARTIAL ELEVATION @ NORTH ENTRY
1/8"=1'-0"

KEYED ELEVATION NOTES:

1. ASPHALT PROFILE SHINGLES, 07311
2. WOOD FASCIA BOARD WRAPPED W/ PRE FINISHED ALUMINUM, 06200
3. PRE FINISHED ALUMINUM LOUVER, 10210
   REFER TO HVAC DWGS.
4. MASONRY VENEER OVER CAVITY WALL CONSTRUCTION 04200
   - 4.1 GROUND FACE BLOCK TYPE 1 - STACK BOND
   - 4.2 SPLIT FACE BLOCK TYPE 1 - RUNNING BOND
   - 4.3 GROUND FACE BLOCK TYPE 2 W/ SINGLE VERTICAL SCORE JOINT ACCENT BAND
   - 4.4 8"X 8" GLASS BLOCK, 60 MIN. FIRE RATING ASSEMBLY. 04812
   - 4.5a GLAZED CMU WITH SINGLE VERTICAL SCORE JOINT COLOR A 04810
   - 4.5b GLAZED CMU WITH SINGLE VERTICAL SCORE JOINT COLOR B 04810
   - 4.6 STANDARD MODULAR BRICK TYPE 1 04810
   - 4.7 STANDARD MODULAR BRICK TYPE _ STACK BOND
   - 4.8 STANDARD MODULAR BRICK TYPE _ SOLDIER COURSE 04810
   - 4.9 STANDARD MODULAR BRICK TYPE _ CORBEL ACCENT
5. PRE FINISHED ALUMINUM GUTTER
6. PRE FINISHED ALUMINUM SCUPPER BOX, 07610
7. PRE FINISHED ALUMINUM DOWNSPOUTS 07610
8. CAST STONE VENEER 03490
9. 1" INSULATED GLASS & PRE FINISHED ALUM. FRAME FIXED WINDOW 08520
10. 1" INSULATED GLASS & PRE FINISHED ALUM. FRAME AWNING WINDOW 08520
11. TRANSLUCENT FIBER GLASS PANEL IN PRE FINISHED ALUM. FRAME 08950
12. STANDING SEAM METAL ROOFING/SIDING 07610
13. 16" HIGH PRE FINISHED METAL LETTERING 10430
14. EXPOSED STRUCTURAL STEEL ROOF TRUSS, PRIMED & PAINTED 05120
15. CAST STONE COLUMN ENCLOSURE 03490
16. PRE FINISHED ALUM. ENTRY DOORS, SIDELITES & TRANSOMS, SEE SCHEDULE DWG. A-6 08410
17. STEP METAL FLASHING SET IN MASONRY 07620
18. CAST IRON DOWNSPOUT TRANSITION
19. LINE OF FINISH GRADE, REFER TO SITE PLAN DWG. C5
20. LINE OF 4" BRICK SHELF, MIN. 8" BELOW FINISH GRADE
21. LINE OF CONCRETE FOOTING, SEE FOUNDATION PLANS
22. O.H. COILING DOOR (ELECTRONICALLY OPERATED)
23. PROTECTIVE PADS @ LOADING DOCK
24. 4"ϕ CON. FILLED STEEL PIPE BOLLARD
25. PROVIDE COLD-APPLIED, SPRAYED-ON WATERPROOFING TO ENTIRE BASEMENT PERIMETER FOUNDATION WALLS (FULL HEIGHT) AND ELEVATOR PIT. SEE SPECIFICATION SECTION 07141 FOR SYSTEM INFORMATION. (APPLIES TO ALL PERIMETER SHOWN ON THIS BASEMENT PLAN)
26. PROVIDE PRE-APPLIED INTRGRALLY BONDED SHEET MEMBRANE WATERPROOFING TO BLIND SIDE OF ENTIRE BASEMENT SLAB AND ELEVATOR PIT SLAB. SEE SPECIFICATION SECTION 07135 FOR SYSTEM INFORMATION. (APPLIES TO ALL AREAS SHOWN ON THIS BASEMENT PLAN)
27. CONTINUOUS ALUMINUM MANUFACTURED COPING SYSTEM

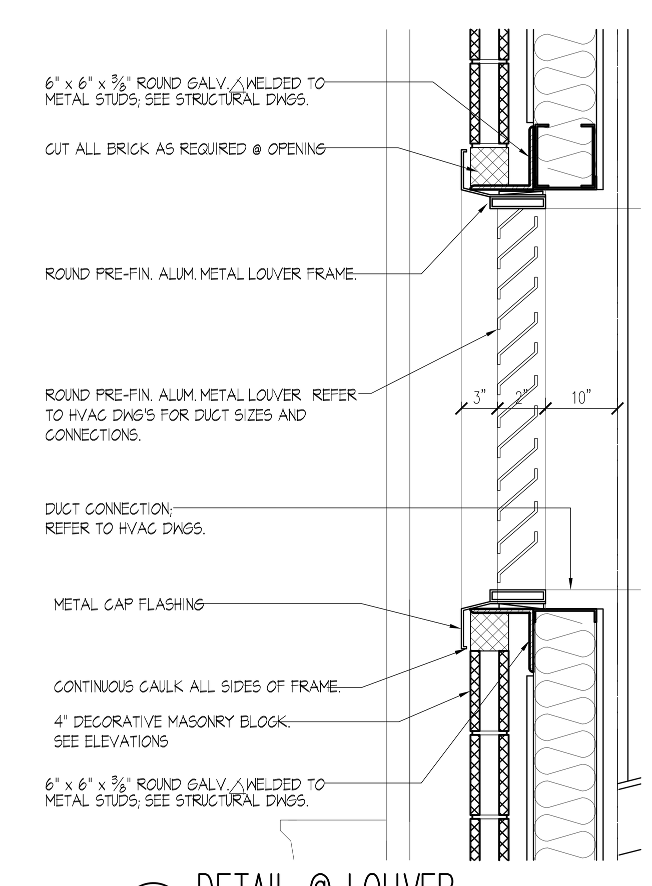

(9) DETAIL @ LOUVER
1"=1'-0"

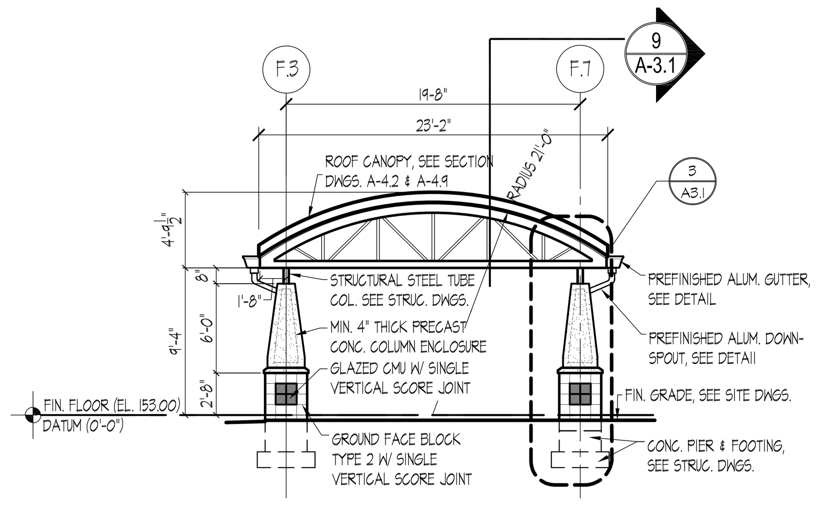

(1) DETAIL ELEVATION @ MAIN ENTRY CANOPY
1/8"=1'-0"

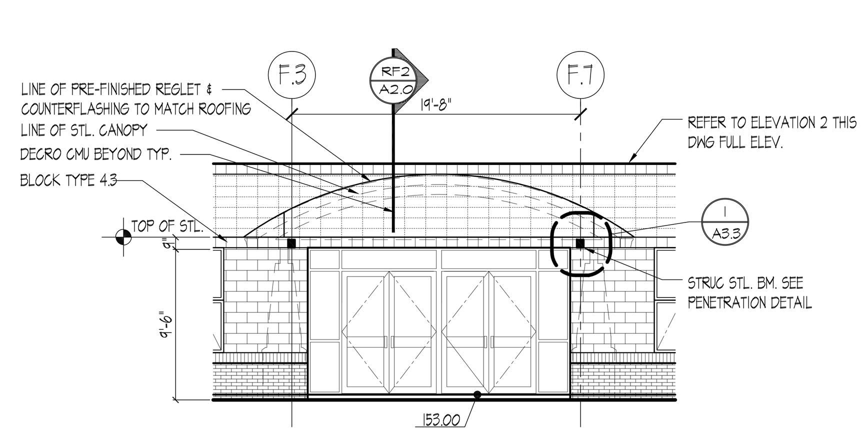

(1A) DETAIL ELEVATION @ MAIN ENTRY
1/8"=1'-0"

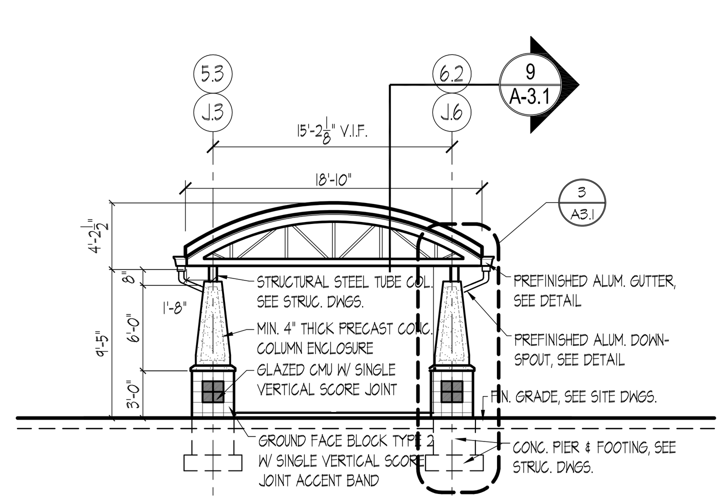

(2) COMMUNITY ENTRY ELEVATION
1/8"=1'-0"

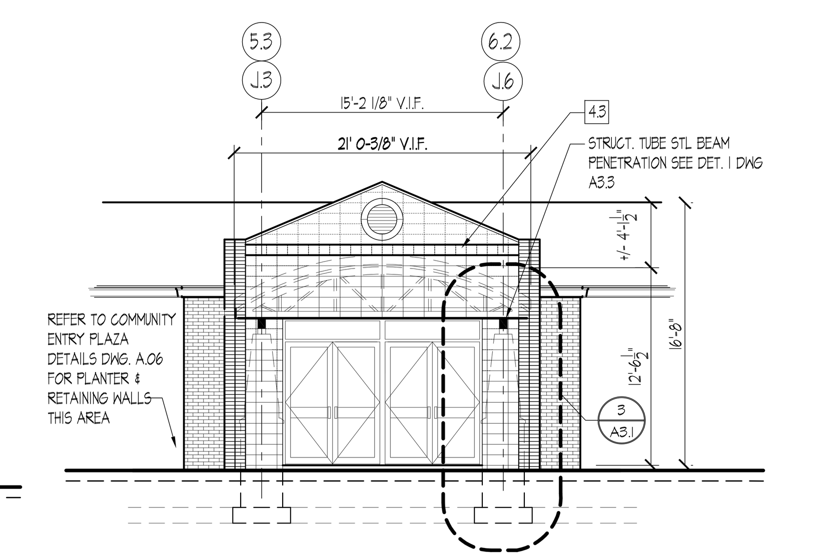

(2A) DETAIL ELEVATION @ COMMUNITY ENTRY
1/8"=1'-0"

NOTE: EXPOSED STEEL & DECK PAINT

EXPOSED STRUCTURAL STEEL MEMBERS AND METAL DECKING TO RECIEVE HIGH PERFORMANCE PAINT COATINGS PER SPECIFICATION SECTION 09960 (TYPICAL AT ALL EXTERIOR CANOPIES, ROOF OVERHANGS, BRACKETS AND STEEL PLATES)

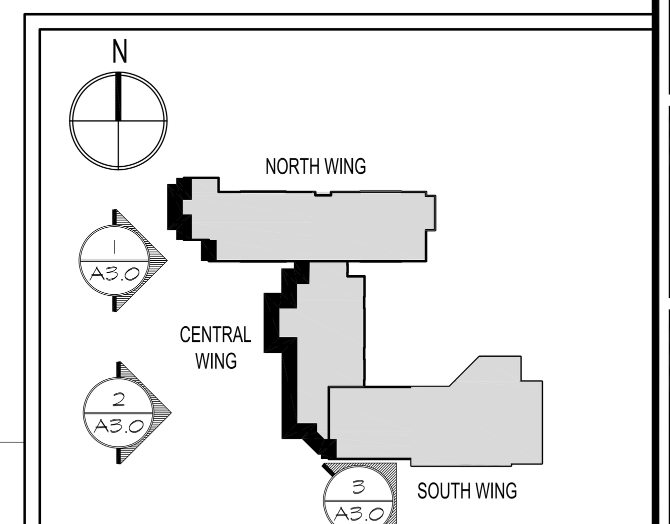

KEY PLAN N.T.S.

SDA
NJ SCHOOLS DEVELOPMENT AUTHORITY

STATE OF NEW JERSEY
ECONOMIC DEVELOPMENT AUTHORITY

DesignIdeasGroup
architecture + planning, llc
15 Bethany Street
New Brunswick, NJ 08901
T: 732.249.6242
F: 732.247.1825
60 West Broad Street
Bethlehem, PA 18018
T: 610.807.0420
F: 610.807.0602

Richard D. Alderiso, AIA
NJ RA AI 15023 NY RA 027416

Robert M. Iamello, AIA
NJ RA 08585 NY RA 018723 DE RA S5-0006594 NH RA 2813

Vincent A. Myers, AIA
NJ RA AI 11415

Joseph P. Tomaino, AIA PP
NJ RA C6086 NJ PP 2442 PA RA B6732 CT RA 9650
DC RA ARC100054 DE RA S5-0006679 MD RA 8887
VA RA 0401011785 VT RA 03-0001370

Jeffrey D. Venezia, AIA
NJ RA AI 08271 NY RA 023719-1

Warren W. Winter, AIA
NJ RA AI 06853 NY RA 010562-1

CONSTRUCTION PROGRAM FOR THE
MARSHALL STREET ELEMENTARY SCHOOL
DOE# 4010-N01-02-0169
NJSDA# PA-0006-C03
DCA# OLCEHPC-05-013 ERU# 6095-05
ADDRESS
NJ SDA
WEST STATE STREET
TRENTON, NEW JERSEY

JOB NO. 23110

ISSUED
05/15/09 ISSUED FOR BID
07/06/09 ISSUED FOR BID
1 08/06/09 DCA REVIEW COMMENTS
9 12/17/12 SDA AMENDMENTS 11 & 12
10 03/25/13 ADDENDUM NO. 2

DRAWING TITLE: ELEVATIONS & DETAILS

DRAWING No. A-3.0

DWG. NO. OF

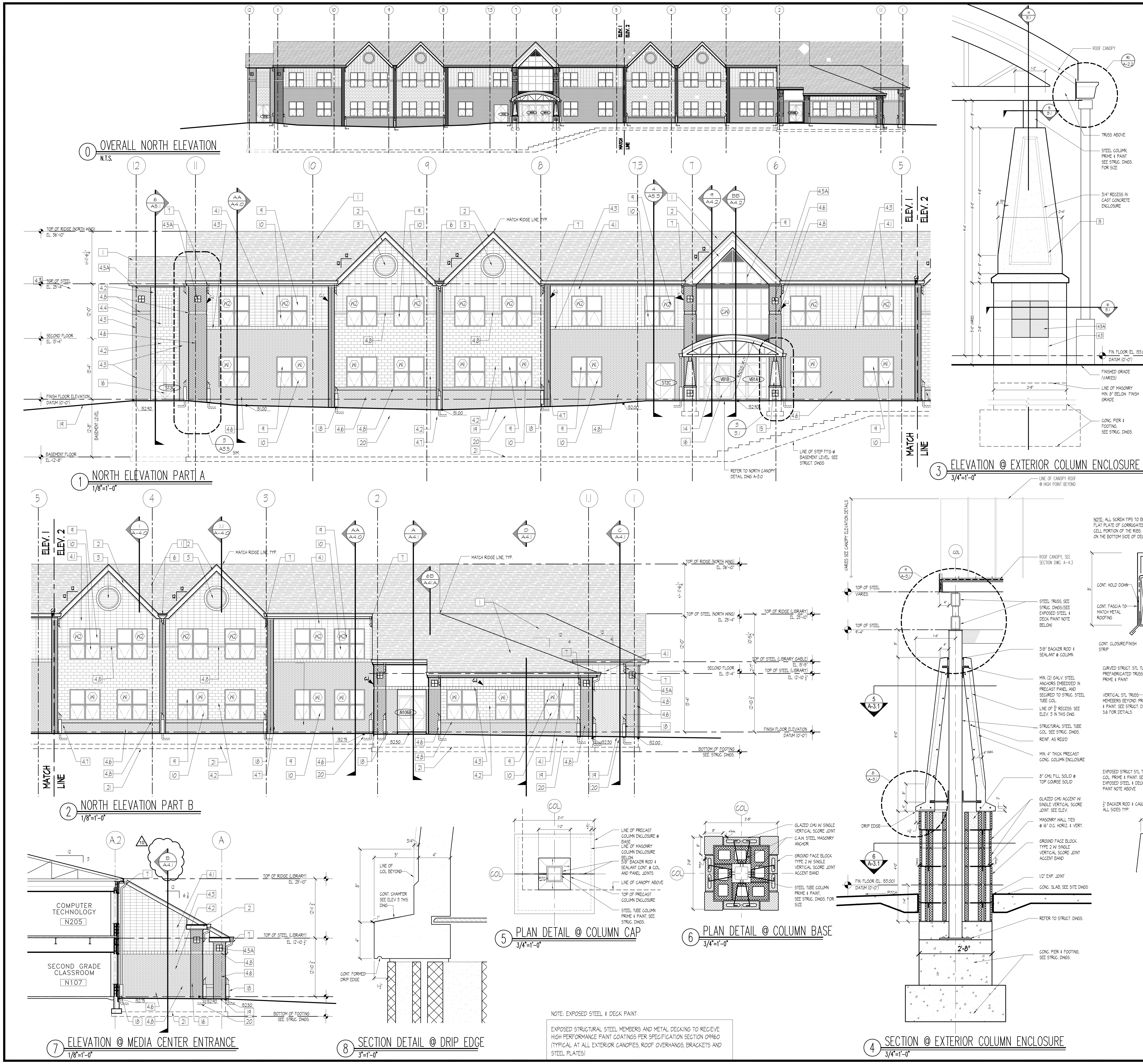

KEYED ELEVATION NOTES:

1. ASPHALT PROFILE SHINGLES, 07311
2. WOOD FASCIA BOARD WRAPPED W/ PRE FINISHED ALUMINUM, 06200
3. PRE FINISHED ALUMINUM LOUVER, 10210 REFER TO HVAC DWGS.
4. MASONRY VENEER OVER CAVITY WALL CONSTRUCTION 04200
   - 4.1 GROUND FACE BLOCK TYPE 1 - STACK BOND
   - 4.2 SPLIT FACE BLOCK TYPE 1 - RUNNING BOND
   - 4.3 GROUND FACE BLOCK TYPE 2 W/ SINGLE VERTICAL SCORE JOINT ACCENT BAND
   - 4.4 8"X 8" GLASS BLOCK, 60 MIN. FIRE RATING ASSEMBLY, 04812
   - 4.5a GLAZED CMU WITH SINGLE VERTICAL SCORE JOINT COLOR A 04810
   - 4.5b GLAZED CMU WITH SINGLE VERTICAL SCORE JOINT COLOR B 04810
   - 4.6 STANDARD MODULAR BRICK TYPE 1 04810
   - 4.7 STANDARD MODULAR BRICK TYPE _ STACK BOND
   - 4.8 STANDARD MODULAR BRICK TYPE _ SOLDIER COURSE 04810
   - 4.9 STANDARD MODULAR BRICK TYPE _ CORBEL ACCENT
5. PRE FINISHED ALUMINUM GUTTER
6. PRE FINISHED ALUMINUM SCUPPER BOX, 07610
7. PRE FINISHED ALUMINUM DOWNSPOUTS 07610
8. CAST STONE VENEER 03490
9. 1" INSULATED GLASS & PRE FINISHED ALUM. FRAME FIXED WINDOW 08520
10. 1" INSULATED GLASS & PRE FINISHED ALUM. FRAME AWNING WINDOW 08520
11. TRANSLUCENT FIBER GLASS PANEL IN PRE FINISHED ALUM. FRAME 08950
12. STANDING SEAM METAL ROOFING/SIDING 07610
13. 16" HIGH PRE FINISHED METAL LETTERING 10430
14. EXPOSED STRUCTURAL STEEL ROOF TRUSS, PRIMED & PAINTED 05120
15. CAST STONE COLUMN ENCLOSURE 03490
16. PRE FINISHED ALUM. ENTRY DOORS, SIDELITES & TRANSOMS, SEE SCHEDULE DWG. A-6 08410
17. STEP METAL FLASHING SET IN MASONRY 07620
18. CAST IRON DOWNSPOUT TRANSITION
19. LINE OF FINISH GRADE, REFER TO SITE PLAN DWG. C5
20. LINE OF 4" BRICK SHELF, MIN. 8" BELOW FINISH GRADE
21. LINE OF CONCRETE FOOTING, SEE FOUNDATION PLANS
22. O.H. COILING DOOR (ELECTRONICALLY OPERATED)
23. PROTECTIVE PADS @ LOADING DOCK
24. 4"Ø CON. FILLED STEEL PIPE BOLLARD

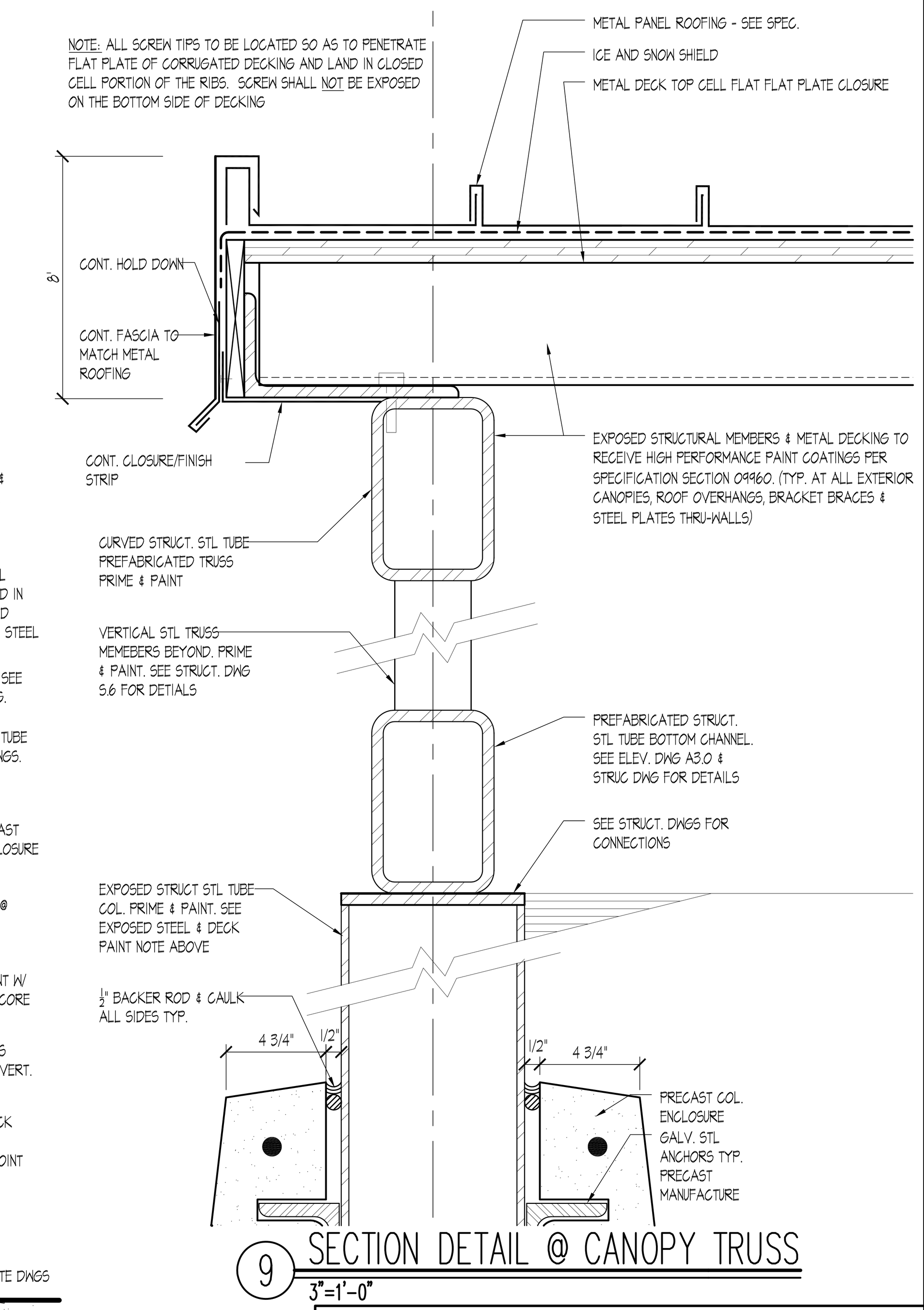

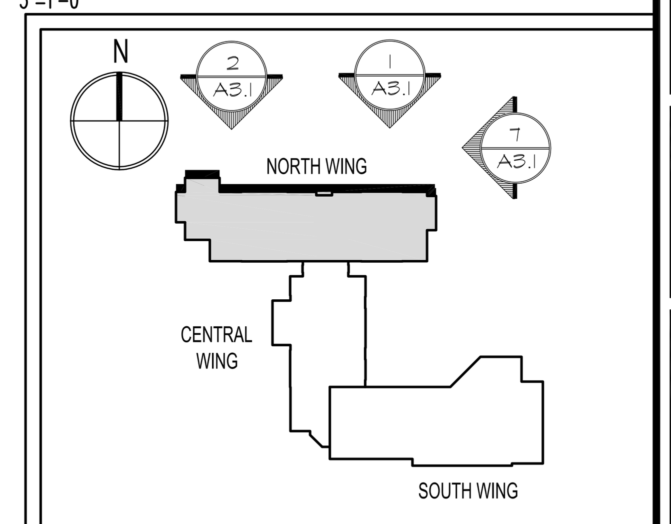

KEY PLAN N.T.S.

SDA
NJ SCHOOLS DEVELOPMENT AUTHORITY
STATE OF NEW JERSEY
ECONOMIC DEVELOPMENT AUTHORITY

DesignIdeasGroup architecture + planning, llc
15 Bethany Street New Brunswick, NJ 08901 T: 732.249.6242 F: 732.247.1825
142 West 36th Street New York, NY 10018 T: 645.584.8419

Richard D. Alderiso, AIA NJ RA AI 15023 NY RA 027416
Vincent A. Myers, AIA NJ RA AI 11415
Jeffrey D. Venezia, AIA NJ RA AI 08271 NY RA 023719-1
Warren W. Winter, AIA NJ RA AI 06853 NY RA 010562-1

CONSTRUCTION PROGRAM FOR THE
MARSHALL STREET ELEMENTARY SCHOOL
DOE# 4010-N01-02-0169
NJSDA# PA-0006-C04
DCA# OLCEHPC-05--013 ERU# 6095-05

ADDRESS
NJSDA
1 WEST STATE STREET
TRENTON, NEW JERSEY

PROJECT NO.: 2012-213.00

ISSUED
05/15/09 ISSUED FOR BID
07/06/09 ISSUED FOR BID
1 08/06/09 DCA REVIEW COMMENTS
9 12/17/12 SDA AMENDMENTS 11 & 12
10 03/25/13 ADDENDUM NO. 2

DRAWING TITLE
ELEVATIONS & DETAILS

DRAWING No.
A-3.1
DWG. NO. OF

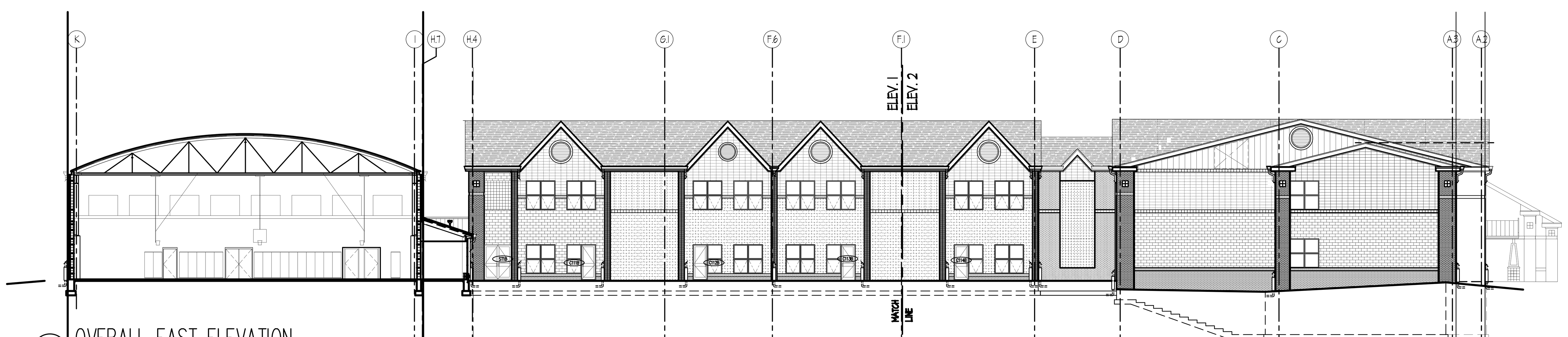

0 OVERALL EAST ELEVATION
N.T.S.

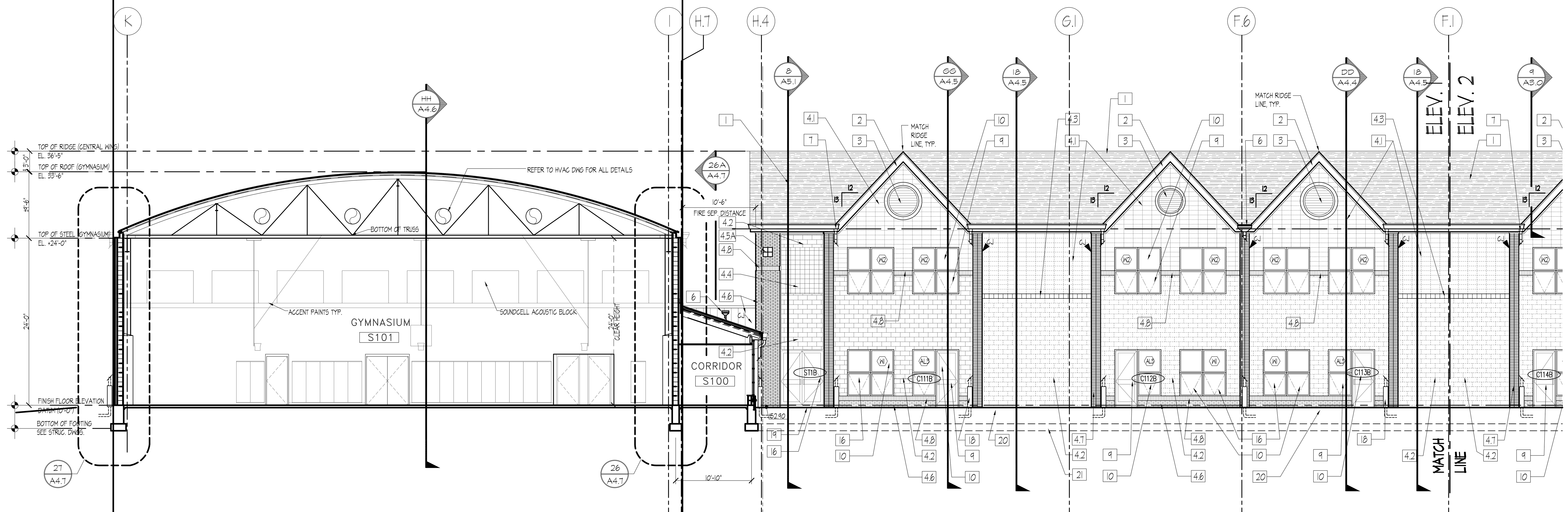

1 EAST ELEVATION PART A
1/8"=1'-0"

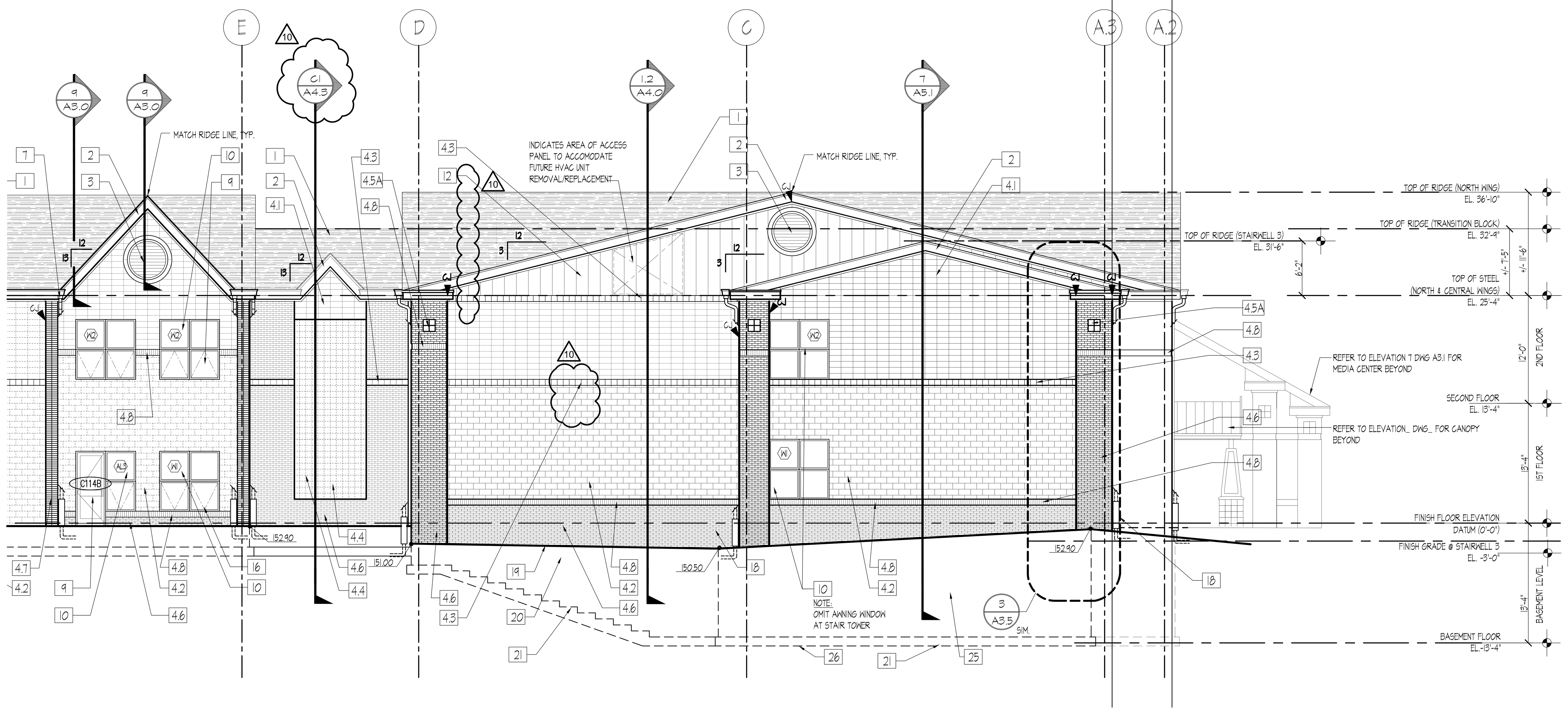

2 EAST ELEVATION PART B
1/8"=1'-0"

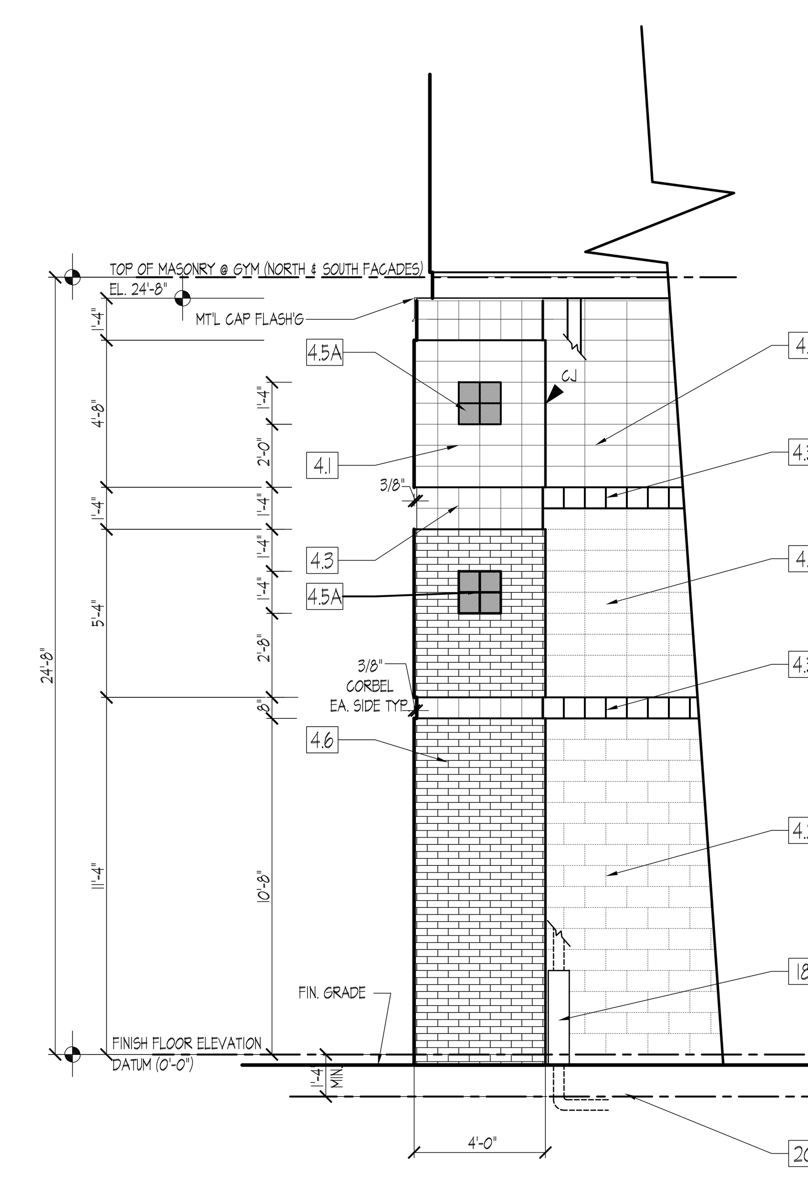

3 FACADE CORNER DETAIL @ GYMNASIUM
1/4"=1'-0"

KEYED ELEVATION NOTES:

1 ASPHALT PROFILE SHINGLES, 07311

2 WOOD FASCIA BOARD WRAPPED W/ PRE FINISHED ALUMINUM, 06200

3 PRE FINISHED ALUMINUM LOUVER, 10210
REFER TO HVAC DWGS.

4 MASONRY VENEER OVER CAVITY WALL CONSTRUCTION 04200
- 4.1 GROUND FACE BLOCK TYPE 1 - STACK BOND
- 4.2 SPLIT FACE BLOCK TYPE 1 - RUNNING BOND
- 4.3 GROUND FACE BLOCK TYPE 2 W/ SINGLE VERTICAL SCORE JOINT ACCENT BAND
- 4.4 8"X 8" GLASS BLOCK, 60 MIN. FIRE RATING ASSEMBLY. 04812
- 4.5a GLAZED CMU WITH SINGLE VERTICAL SCORE JOINT COLOR A 04810
- 4.5b GLAZED CMU WITH SINGLE VERTICAL SCORE JOINT COLOR B 04810
- 4.6 STANDARD MODULAR BRICK TYPE 1 04810
- 4.7 STANDARD MODULAR BRICK TYPE _ STACK BOND
- 4.8 STANDARD MODULAR BRICK TYPE _ SOLDIER COURSE 04810
- 4.9 STANDARD MODULAR BRICK TYPE _ CORBEL ACCENT

5 PRE FINISHED ALUMINUM GUTTER

6 PRE FINISHED ALUMINUM SCUPPER BOX, 07610

7 PRE FINISHED ALUMINUM DOWNSPOUTS 07610

8 CAST STONE VENEER 03490

9 1" INSULATED GLASS & PRE FINISHED ALUM. FRAME FIXED WINDOW 085

10 1" INSULATED GLASS & PRE FINISHED ALUM. FRAME AWNING WINDOW 08

11 TRANSLUCENT FIBER GLASS PANEL IN PRE FINISHED ALUM. FRAME 089

12 STANDING SEAM METAL ROOFING/SIDING 07610

13 16" HIGH PRE FINISHED METAL LETTERING 10430

14 EXPOSED STRUCTURAL STEEL ROOF TRUSS, PRIMED & PAINTED 05120

15 CAST STONE COLUMN ENCLOSURE 03490

16 PRE FINISHED ALUM. ENTRY DOORS, SIDELITES & TRANSOMS, SEE SCHEDULE DWG. A-6 08410

17 STEP METAL FLASHING SET IN MASONRY 07620

18 CAST IRON DOWNSPOUT TRANSITION

19 LINE OF FINISH GRADE, REFER TO SITE PLAN DWG. C5

20 LINE OF 4" BRICK SHELF, MIN. 8" BELOW FINISH GRADE

21 LINE OF CONCRETE FOOTING, SEE FOUNDATION PLANS

22 O.H. COILING DOOR (ELECTRONICALLY OPERATED)

23 PROTECTIVE PADS @ LOADING DOCK

24 4"Ø CON. FILLED STEEL PIPE BOLLARD

25 PROVIDE COLD-APPLIED, SPRAYED-ON WATERPROOFING TO ENTIRE BASEMENT PERIMETER FOUNDATION WALLS (FULL HEIGHT) AND ELEVATOR PIT. SEE SPECIFICATION SECTION 07141 FOR SYSTEM INFORMATION. (APPLIES TO ALL PERIMETER SHOWN ON THIS BASEMENT PLAN)

26 PROVIDE PRE-APPLIED INTRGRALLY BONDED SHEET MEMBRANE WATERPROOFING TO BLIND SIDE OF ENTIRE BASEMENT SLAB AND ELEVATOR PIT SLAB. SEE SPECIFICATION SECTION 07135 FOR SYSTEM INFORMATION. (APPLIES TO ALL AREAS SHOWN ON THIS BASEMENT PLAN)

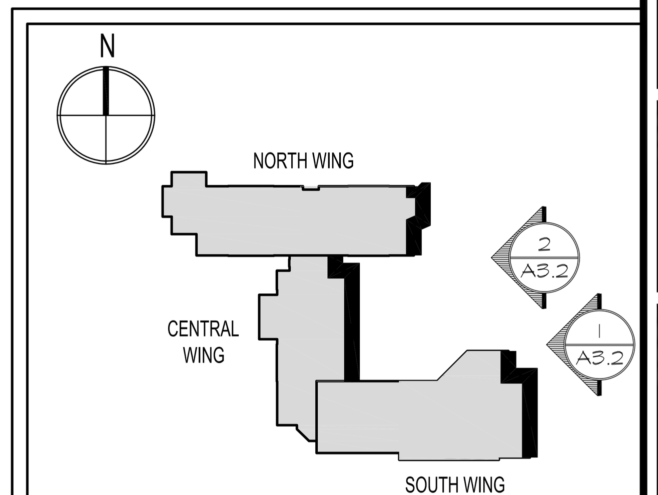

KEY PLAN N.T.S.

CONSTRUCTION PROGRAM FOR THE
MARSHALL STREET ELEMENTARY SCHOOL
DOE# 4010-N01-02-0169
NJSDA# PA-0006-C04
DCA# OLCEHPC-05--013 ERU# 6095-05
ADDRESS
NJSDA
1 WEST STATE STREET
TRENTON, NEW JERSEY

SDA
NJ SCHOOLS DEVELOPMENT AUTHORITY
STATE OF NEW JERSEY
ECONOMIC DEVELOPMENT AUTHORITY

DesignIdeasGroup
architecture + planning, llc
15 Bethany Street
New Brunswick, NJ 08901
T: 732.249.6242
F: 732.247.1825
142 West 36th Street
New York, NY 10018
T: 645.584.8419

Richard D. Alderiso, AIA
NJ RA AI 15023 NY RA 027416
Vincent A. Myers, AIA
NJ RA AI 11415
Jeffrey D. Venezia, AIA
NJ RA AI 08271 NY RA 023719-1
Warren W. Winter, AIA
NJ RA AI 06853 NY RA 010562-1

PROJECT NO.: 2012-213.00

ISSUED
05/15/09 ISSUED FOR BID
07/06/09 ISSUED FOR BID
1 08/06/09 DCA REVIEW COMMENTS
9 12/17/12 SDA AMENDMENTS 11 & 12
10 03/25/13 ADDENDUM NO. 2

DRAWING TITLE
ELEVATIONS

DRAWING No.
A-3.2

DWG. NO. OF

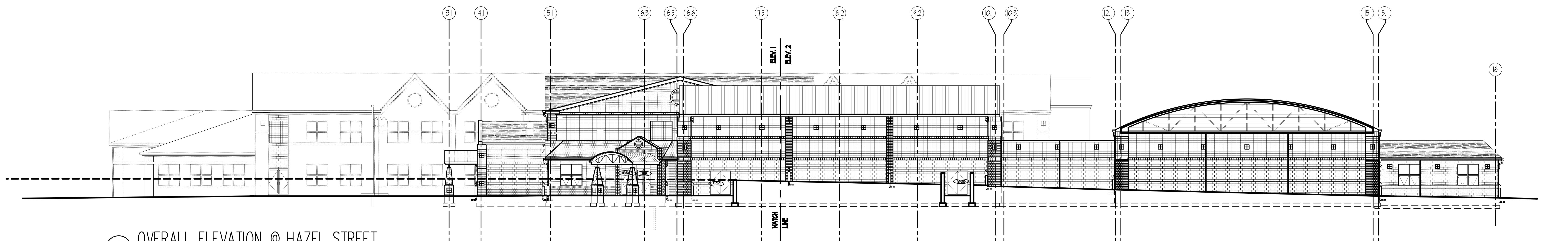

0 OVERALL ELEVATION @ HAZEL STREET
N.T.S.

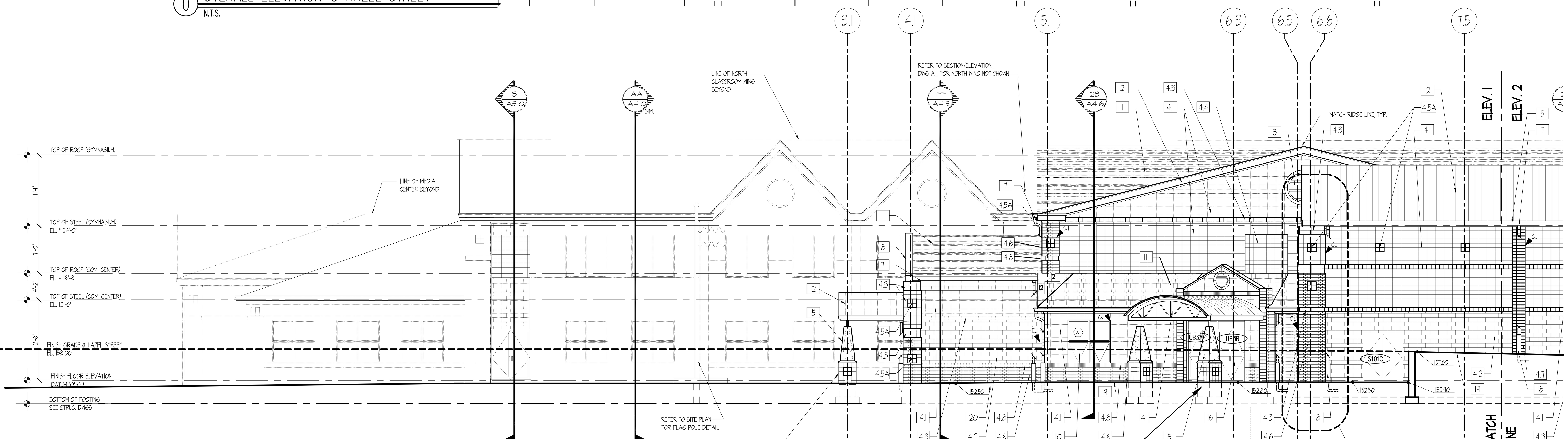

NOTE:
REFER TO COMMUNITY ENTRY PLAZA PANS & DETAILS DWG A-0.6 FOR ALL ARCHITECTURAL RETAINING WALLS & STAIR & ACCESIBLE RAMP FOR THIS AREA

1 SOUTH ELEVATION PART A
1/8"=1'-0"

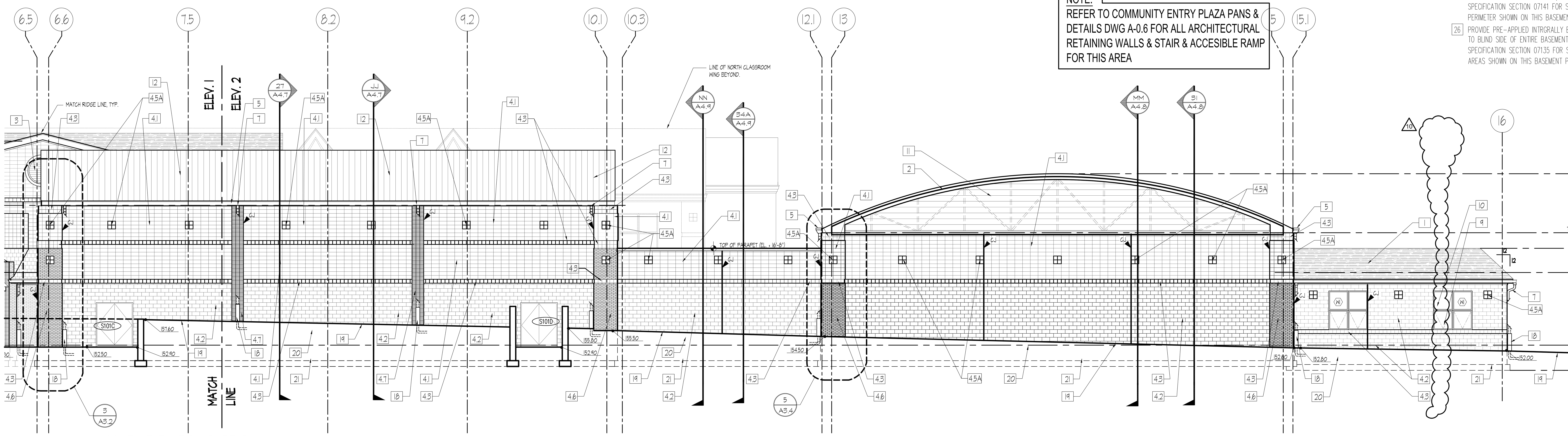

2 SOUTH ELEVATION PART B
1/8"=1'-0"

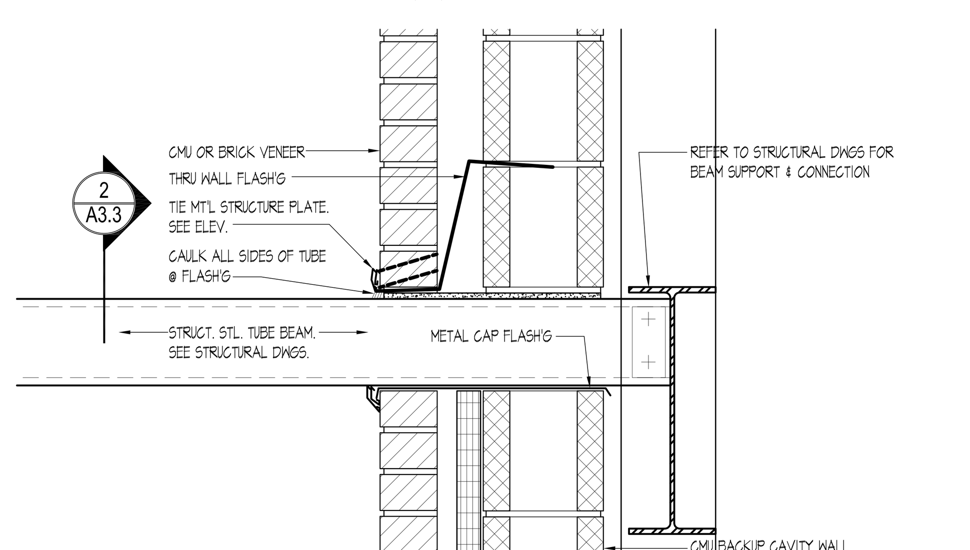

1 DETAIL CANOPY BEAM PENETRATION
1 1/2"=1'-0"

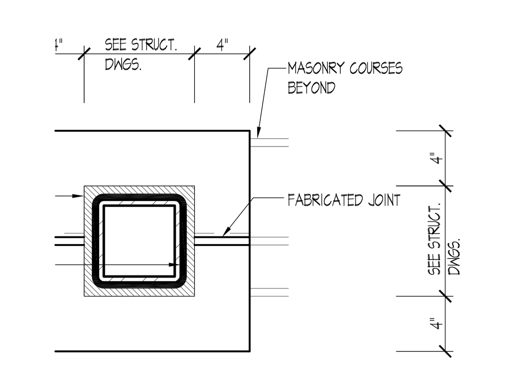

2 DETAIL ELEVATION @ CANOPY FRAMING PENETRATION
1 1/2"=1'-0"

KEYED ELEVATION NOTES:

1. ASPHALT PROFILE SHINGLES, 07311
2. WOOD FASCIA BOARD WRAPPED W/ PRE FINISHED ALUMINUM, 06200
3. PRE FINISHED ALUMINUM LOUVER, 10210 REFER TO HVAC DWGS.
4. MASONRY VENEER OVER CAVITY WALL CONSTRUCTION 04200
   - 4.1 GROUND FACE BLOCK TYPE 1 - STACK BOND
   - 4.2 SPLIT FACE BLOCK TYPE 1 - RUNNING BOND
   - 4.3 GROUND FACE BLOCK TYPE 2 W/ SINGLE VERTICAL SCORE JOINT ACCENT BAND
   - 4.4 8"X 8" GLASS BLOCK, 60 MIN. FIRE RATING ASSEMBLY. 04812
   - 4.5a GLAZED CMU WITH SINGLE VERTICAL SCORE JOINT COLOR A 04810
   - 4.5b GLAZED CMU WITH SINGLE VERTICAL SCORE JOINT COLOR B 04810
   - 4.6 STANDARD MODULAR BRICK TYPE 1 04810
   - 4.7 STANDARD MODULAR BRICK TYPE _ STACK BOND
   - 4.8 STANDARD MODULAR BRICK TYPE _ SOLDIER COURSE 04810
   - 4.9 STANDARD MODULAR BRICK TYPE _ CORBEL ACCENT
5. PRE FINISHED ALUMINUM GUTTER
6. PRE FINISHED ALUMINUM SCUPPER BOX, 07610
7. PRE FINISHED ALUMINUM DOWNSPOUTS 07610
8. CAST STONE VENEER 03490
9. 1" INSULATED GLASS & PRE FINISHED ALUM. FRAME FIXED WINDOW 08520
10. 1" INSULATED GLASS & PRE FINISHED ALUM. FRAME AWNING WINDOW 08520
11. TRANSLUCENT FIBER GLASS PANEL IN PRE FINISHED ALUM. FRAME 08950
12. STANDING SEAM METAL ROOFING/SIDING 07610
13. 16" HIGH PRE FINISHED METAL LETTERING 10430
14. EXPOSED STRUCTURAL STEEL ROOF TRUSS, PRIMED & PAINTED 05120
15. CAST STONE COLUMN ENCLOSURE 03490
16. PRE FINISHED ALUM. ENTRY DOORS, SIDELITES & TRANSOMS, SEE SCHEDULE DWG. A-6 08410
17. STEP METAL FLASHING SET IN MASONRY 07620
18. CAST IRON DOWNSPOUT TRANSITION
19. LINE OF FINISH GRADE, REFER TO SITE PLAN DWG. C5
20. LINE OF 4" BRICK SHELF, MIN. 8" BELOW FINISH GRADE
21. LINE OF CONCRETE FOOTING, SEE FOUNDATION PLANS
22. O.H. COILING DOOR (ELECTRONICALLY OPERATED)
23. PROTECTIVE PADS @ LOADING DOCK
24. 4"φ CON. FILLED STEEL PIPE BOLLARD
25. PROVIDE COLD-APPLIED, SPRAYED-ON WATERPROOFING TO ENTIRE BASEMENT PERIMETER FOUNDATION WALLS (FULL HEIGHT) AND ELEVATOR PIT. SEE SPECIFICATION SECTION 07141 FOR SYSTEM INFORMATION. (APPLIES TO ALL PERIMETER SHOWN ON THIS BASEMENT PLAN)
26. PROVIDE PRE-APPLIED INTRGRALLY BONDED SHEET MEMBRANE WATERPROOFING TO BLIND SIDE OF ENTIRE BASEMENT SLAB AND ELEVATOR PIT SLAB. SEE SPECIFICATION SECTION 07135 FOR SYSTEM INFORMATION. (APPLIES TO ALL AREAS SHOWN ON THIS BASEMENT PLAN)

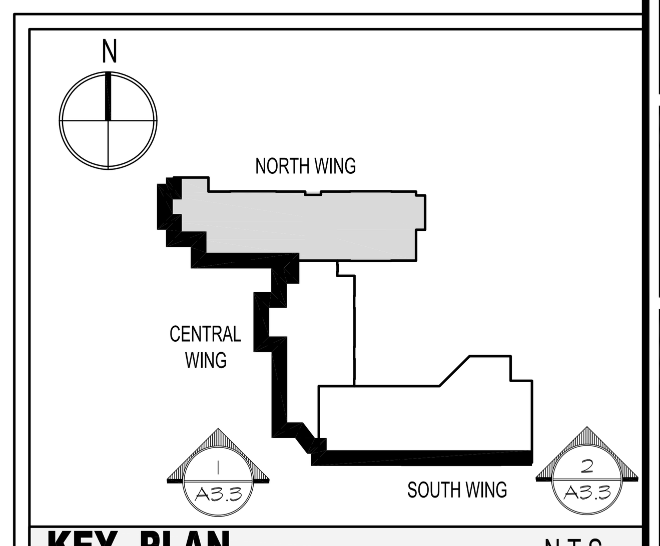

KEY PLAN N.T.S.

SDA
NJ SCHOOLS DEVELOPMENT AUTHORITY

STATE OF NEW JERSEY

ECONOMIC DEVELOPMENT AUTHORITY

Design Ideas Group
architecture + planning, llc
15 Bethany Street
New Brunswick, NJ 08901
T: 732.249.6242
F: 732.247.1825
142 West 36th Street
New York, NY 10018
T: 645.584.8419

Richard D. Alderiso, AIA
NJ RA AI 15023 NY RA 027416
Vincent A. Myers, AIA
NJ RA AI 11415
Jeffrey D. Venezia, AIA
NJ RA AI 08271 NY RA 023719-1
Warren W. Winter, AIA
NJ RA AI 06853 NY RA 010562-1

CONSTRUCTION PROGRAM FOR THE
MARSHALL STREET ELEMENTARY SCHOOL
DOE# 4010-N01-02-0169
NJSDA# PA-0006-C04
DCA# OLCEHPC-05--013 ERU# 6095-05
ADDRESS
NJSDA
1 WEST STATE STREET
TRENTON, NEW JERSEY

PROJECT NO.: 2012-213.00

ISSUED
05/15/09 ISSUED FOR BID
07/06/09 ISSUED FOR BID
1 08/06/09 DCA REVIEW COMMENTS
9 12/17/12 SDA AMENDMENTS 11 & 12
10 03/25/13 ADDENDUM NO. 2

DRAWING TITLE
ELEVATIONS

DRAWING No.
A-3.3

DWG. NO. OF

Drawing name: P:\2012\2012-213.00 Marshall St Elementary - Restart\DRAWINGS\Condocs\A3_ELEVATIONS\213-A3.3.dwg Plotted By: MFERRAGAMO Mar 25, 2013 - 6:01pm

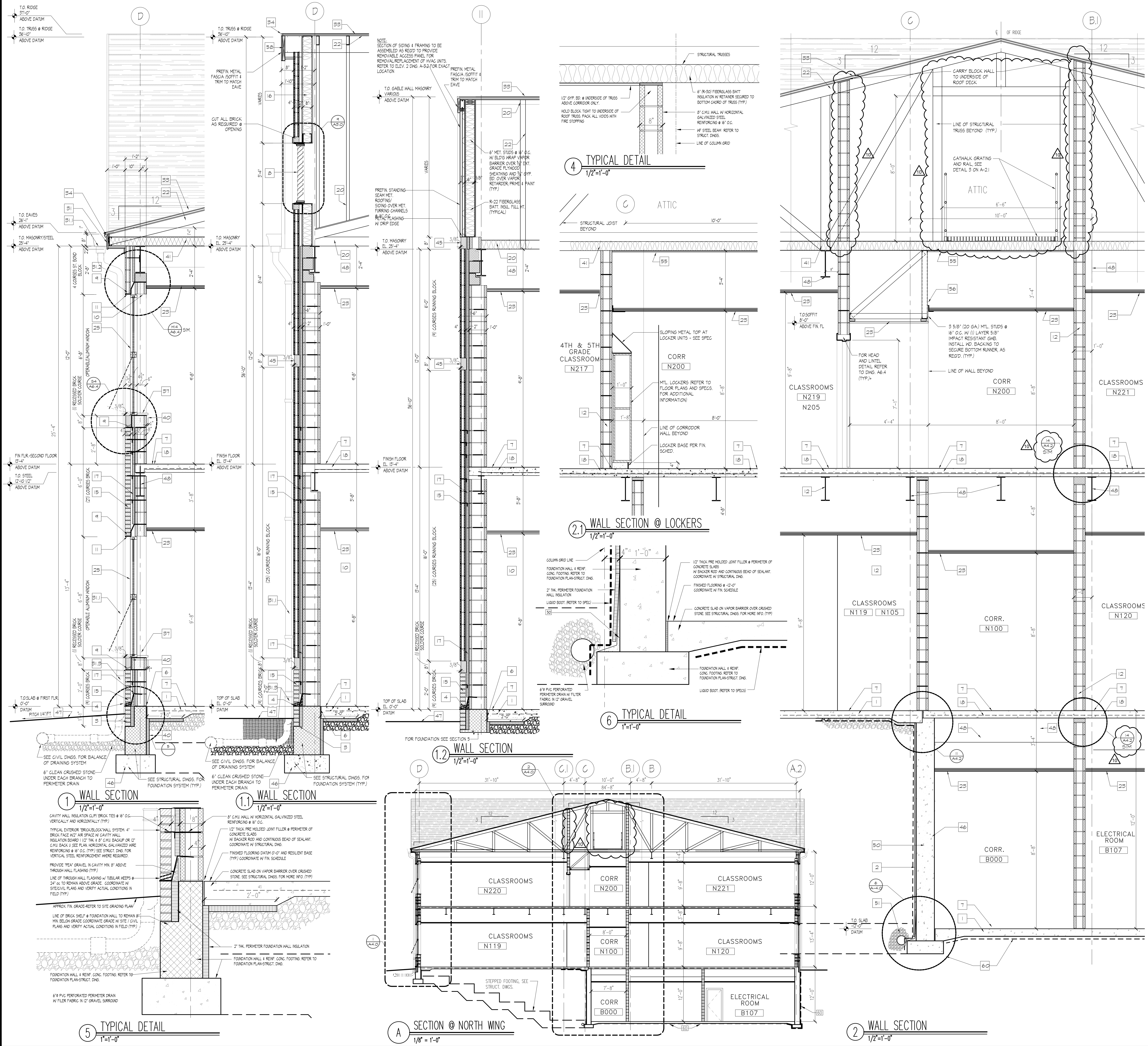

KEYED WALL SECTION NOTES:

1 CONCRETE SLAB ON VAPOR BARRIER OVER CRUSHED STONE. SEE STRUCTURAL DWGS. FOR MORE INFO. (TYP)
2 2" THK. PERIMETER FOUNDATION WALL INSULATION
3 LINE OF BRICK SHELF @ FOUNDATION WALL TO REMAIN 8" MIN. BELOW GRADE COORDINATE GRADE W/ SITE / CIVIL PLANS AND VERIFY ACTUAL CONDITIONS IN FIELD (TYP)
4 LINE OF THROUGH WALL FLASHING W/ TUBULAR WEEPS @ 24" oc. TO REMAIN ABOVE GRADE. COORDINATE W/ SITE/CIVIL PLANS AND VERIFY ACTUAL CONDITIONS IN FIELD (TYP)
5 PROVIDE "PEA" GRAVEL IN CAVITY MIN. 8" ABOVE THROUGH WALL FLASHING (TYP)
6 1/2 THICK PRE MOLDED JOINT FILLER @ PERIMETER OF CONCRETE SLABS W/ BACKER ROD AND CONTINUOUS BEAD OF SEALANT. COORDINATE W/ STRUCTURAL DWG.
7 FINISHED FLOORING AND RESILIENT BASE (TYP) COORDINATE W/ FIN. SCHEDULE
8 PRE FINISHED ALUMINUM ARCHITECTURAL LOUVER. COORDINATE WITH MECHANICAL DRAWINGS.
9 THROUGH WALL FLASHING W/ END DAMS ABOVE MASONRY OPENING W/ WEEPS @ 24" oc.
10 STEEL LINTELS, COORDINATE W/ STRUCT DWG.
11 GALVANIZED STEEL LINTELS, PAINTED @ EXTERIOR OPNINGS. SIZES SEE STRUCT DWG.
12 8" C.M.U. WALL W/ HORIZONTAL GALVANIZED STEEL REINFORCING @ 16" O.C.
13 6" C.M.U. WALL W/ HORIZONTAL GALVANIZED STEEL REINFORCING @ 16" O.C.
14 FIRE RATED 12" C.M.U. WALL W/ HORIZONTAL GALVANIZED STEEL REINFORCING @ 16" O.C.
15 TYPICAL EXTERIOR "BRICK/BLOCK"WALL SYSTEM. 4" BRICK FACE W/2" AIR SPACE W/ CAVITY WALL INSULATION BOARD 1 1/2" THK & 8" C.M.U. BACKUP OR 12" C.M.U. BACK U SEE PLAN. HORIZONTAL GALVANIZED WIRE REI FORCING @ 16" O.C. (TYP) SEE STRUCT. DWG. FOR VERTICAL STEEL REINFORCEMENT WHERE REQUIRED.
16 6" METAL STUD @ GA. 16" O.C. & 5/8" EXTER. GRADE GYP BD SHEATHING R-19 FIBERGLASS BATT INSULATION
17 CAVITY WALL INSULATION CLIP/ BRICK TIES @ 16" O.C. VERTICALLY AND HORIZONTALLY (TYP)
18 CONC. SLAB W/ METAL DECK ON WF FRAMING SYSTEM. SEE STRUCT DWG
19 SPRAYED FIRE PROOFING FOR 1 HR. FIRE RATING REQUIREMENTS
20 STEEL WF BEAM / BAR JOIST/METAL DECK ROOF FRAMING SYSTEM REFER STRUCT. DWGS.
21 STEEL WF BEAM / STEEL TRUSS /METAL DECK ROOF FRAMING SYSTEM REFER STRUCT. DWGS.
22 PREENGINEERED LIGHT GA.METAL STUD TRUSS SYSTEM & 9/16" GALV.METAL DECK BY USD INC. ROOF FRAMING SYSTEM REFER STRUCT. DWGS.
23 CEILING SYSTEM (TYP) REFER TO REFLECTED CEILING PLANS
24 SUSPENDED GYP. BD. CEILING, FASCIA & SOFFIT SYSTEMS (TYP.) REFER REFLECTED CEILING PLAN
25 ALUMINUM WINDOW - COORDINATE W/ SPECIFICATIONS, ELEVATIONS, WALL SECTIONS & FLOOR PLANS
26 GLAZED CURTAIN WALL SYSTEM
27 CONTINUOUS P.T. WOOD BLOCKING SECURED TO TOP OF MASONRY BY 3/8" X 8" ANCHOR BOLTS @ 2'-8" O.C. (TYP.)
28 ROOFING SYSTEM OVER 3" MIN. TAPERED INSULATION(TYP. OR OVER 3" UNIFORM INSULATION).
29 ASPHALT ROOF SHINGLES OVER 2 PLY FELT UNDERLAYMENT OVER VENTILATED NAILBASE OVER 3-INCH THICK RIGID INSULATION OVER 1/2" PROTECTION BOARD OVER METAL DECK. PROVIDE ICE AND WATERSHIELD AT EAVES, VALLEYS, HIPS, RIDGE AND PENETRATIONS. APPLY VAPOR BARRIER (PEEL & STICK ICE AND WATER SHIELD) OVER 1/2" PROTECTION BOARD
29.1 ASPHALT ROOF SHINGLES OVER 2 PLY FELT UNDERLAYMENT ON VENTILATED NAILBASE OVER 3" THICK RIGID INSULATION OVER 5/8" FIRE RETARDANT BASE SHEATHING. PROVIDE ICE AND WATERSHIELD AT EAVES, VALLEYS, HIPS, RIDGE, AND PENETRATIONS. APPLY VAPOR BARRIER (ICE & WATER SHIELD OVER 5/8" BASE SHEATHING
30 STANDING SEAM METAL ROOFING OVER 2 PLY FELT UNDERLAYMENT OVER 3/4" EXTERIOR GRADE PLYWOOD SUBSTRATE MECHANICALLY FASTENED TO METAL DECK. PROVIDE INTERGRAL FLAT PLATE AT TOP OF DECK FOR FASTENING. SCREWS TO LAND IN CLOSED CELL OF DECK SO AS NOT TO BE EXPOSED FROM UNDERSIDE OF CANOPY
30.1 STANDING SEAM METAL ROOF W/TRIMS @ PERIMETER OVER METAL DECK ON STEEL TRUSS SYSTEM. PRIMED AND PAINTED, SIMILAR TO EXTERIOR TRUSSSYSTEM @ VESTIBULE
31 PREFIN. METAL FASCIA/SOFFIT SYSTEM TO MATCH METAL ROOFING W/ 3/4" FURRING CHANNELS/ MTL STUD FRAMING BRACE TO STRUCT. AND/ OR MASONRY.
31.1 PREFINISHED ALUM. GUTTER
31.2 PREFINISHED ALUM. DOWNSPOUT - SEE ELEVATIONS
31.3 CAST IRON DOWNSPOUT BOOT. J.R. SMITH MODEL No. 1786-24 OR APPROVED EQUAL. PRIME & FIN. PAINT. PROVIDE N-12 HIGH DENSITY POLYURETHANE PIPE (ADS). INCLUDE ALL FITTINGS, ADAPTERS, BENDS & HARDWARE NECESSARY TO COMPLETE DOWNSPOUT SYSTEM.
32 ICE/SNOW GUARD AT EAVES NEAR GUTTER @ SLOPING METAL ROOF. SPACING TO BE BY MFR'S STANDARD.
33 ASPHALT & COMPOSITE SHINGLES OVER 5/8" FIRE RETARDANT PLYWOOD SHEATHING AND 15LB ASPHALT FELT UNDERLAYMENT. FOR EAVES, VALLEYS & RIDGE FLASHING REQUIREMENTS REFER TO SPECS. & DETAILS ON DWGS. 2 SERIES. PROVIDE METAL DRIP EDGE AT EAVES.
33A STANDING METAL SEAM ROOF ASSEMBLY OVER 3" RIGID INSULATION (2LB/CUFT.MIN. DENSITY) OVER 1/2" PROTECTION BOARD OVER METAL DECKING. APPLY VAPOR BARRIER (PEEL & STICK ICE AND WATER SHIELD) OVER 1/2" PROTECTION BOARD
34 CONTINUOUS ALUMINUM MANUFACTURED ROOF EDGE/ GRAVEL STOP SYSTEM (TYP)
35 CONTINUOUS ALUMINUM MANUFACTURED COPING SYSTEM (TYP.)
36 KAL-WAL
37 5/4" THICK WOOD (CLEAR POPLAR) WINDOW WILL, PRIME & PAINTED
38 PRE-FINISHED STANDING SEAM ROOF W/ METAL FASCIA/SOFFIT & ALUM. GUTTER & DOWN SPOUT OVER EXTR. GRADE PLYWOOD SHEATHING & 15 LB ASPHALT FELT UNDERLAYMENT SUPPORTED ON LIGHT GA. METAL STUD FRAMING SYSTEM.
39 FILL BLOCK VENEER AT WINDOWS W/ GRANULAR INSULATION (TYP)
40 FILL C.M.U. CORES SOLID CONTINUOUS AT ALL TRANSITIONS(TYP).
41 6" (R-30) FIBERGLASS BATT INSULATION W/ RETAINER SECURED TO BOTTOM CHORD OF TRUSS (TYP)
42 1/2" GYP. BOARD PRIMED & PAINTED OVER METAL STUD FRAMING ON 16" O.C.
43 5/8" REINF. GYP. BOARD PRIMED & PAINTED OVER METAL STUD FRAMING ON 16" O.C.
44 PREFINISHED ALUM. ENTRY DOORS & FRAMING SYSTEM. SEE DOOR SCHEDULE & DETAILS
45 RECESSED BRICK SOLDIER OR GFB VENEER ACCENT BAND. REFER TO ELEVATION
46 FOUNDATION WALL & REINF. CONC. FOOTING. REFER TO FOUNDATION PLAN-STRUCT. DWG.
47 APPROX. FIN. GRADE-REFER TO SITE GRADING PLAN
48 WF STEEL BEAM REFER TO STRUCT. DWGS.
49 4" HIGH VINYL BASE
50 COLD APPLIED, SPRAYED-ON WATERPROOFING SYSTEM FULL HEIGHT ON FOUNDATION WALL-TIE INTO SLAB SYSTEM
51 6"Ø PVC PERFORATED PERIMETER DRAIN W/ FILER FABRIC IN 12" GRAVEL SURROUND. COORD. W/ CIVIL
52 PRECAST 8" TERRAZZO BASE
53 PRECAST TERRAZZO TILE FLOORING
54 CERAMIC TILE FINISH OVER WATER RESISTANCE GYP. BD AT MTL STUD WALL.
55 1/2" GYP. BD. @ UNDERSIDE OF TRUSS ABOVE CORRIDOR ONLY.
56 1/2" GYP. BD. FULL HEIGHT @ CORRIDOR ONLY
57 SUSPENDED 1/2" GYP. BOARD PRIMED & PAINTED HUNG FROM STRUCTURE ABOVE
58 TYPICAL NOTE:WOOD FASCIA, BLOCKING, ROOF SHEATHING AND WOOD FILLERS SHALL BE FIRE RETARDANT TREATED WOOD
59 ½" BACKER ROD AND CHAULK CONTROL JOINT
60 PRE-APPLIED INTERGRALLY BONDED SHEET MEMBRANE WATERPROOFING SYSTEM - TIE INTO FOUNDATION WALL SYSTEM

1. SEE STRUCTURAL DRAWINGS FOR ALL HORIZONTAL AND VERTICAL REINFORCING @ ALL INTERIOR AND EXTERIOR WALL CONSTRUCTION.
2. SIZE AND ORIENTATIONS OF STRUCTURAL MEMBERS SHOWN ARE FOR GENERAL INFORMATION ONLY. SEE STRUCTURAL DRAWINGS FOR ACTUAL SIZES AND ORIENTATIONS.
3. SEE STRUCTURAL DRAWINGS FOR ALL FOOTING, FOUNDATION, CONCRETE SLAB, AND ASSOCIATED REINFORCING INFORMATION (TYP)
4. THE DATUM ELEVATION (+0'-0", EL. 156.00') SHALL BE TOP OF THE CONCRETE SLAB.
5. ELEVATIONS SHOWN ON WALL SECTIONS (X'-X") SHALL BE ELEVATIONS AS THEY ARE REFERENCED FROM THE DATUM ELEVATION (+0' 0", EL. 156.00')
6. COORDINATE LINTEL SIZES AND ORIENTATIONS W/ THE STRUCTURAL DRAWINGS.
7. FOR INFORMATION REGARDING "TYPES OF BLOCKS/ BRICKS ETC. SEE ELEVATION DWGS.
8. FOR GRADE, COORDINATE W/ SITE DWGS
9. SEE STRUCTURAL DRAWINGS AND APPLICABLE WALL SECTIONS FOR ALL SLAB DEPRESSION(S).
10. SECTION INDICATORS SHOWN AT THE KEY PLANS ARE THE GENERAL LOCATIONS AND ORIENTATIONS. SEE FLOOR PLANS FOR ACTUAL LOCATIONS AND ORIENTATIONS.

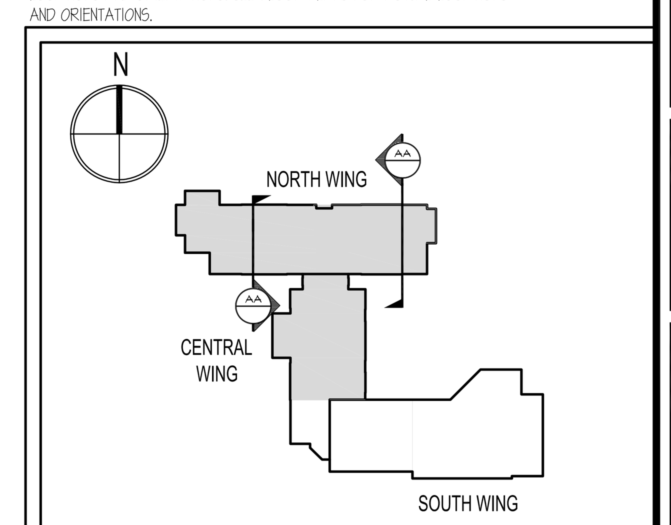

KEY PLAN N.T.S.

SDA
NJ SCHOOLS DEVELOPMENT AUTHORITY
STATE OF NEW JERSEY
ECONOMIC DEVELOPMENT AUTHORITY

DesignIdeasGroup architecture + planning, llc
15 Bethany Street
New Brunswick, NJ 08901
T: 732.249.6242
F: 732.247.1825
142 West 36th Street
New York, NY 10018
T: 645.584.8419

Richard D. Alderiso, AIA
NJ RA AI 15023 NY RA 027416
Vincent A. Myers, AIA
NJ RA AI 11415
Jeffrey D. Venezia, AIA
NJ RA AI 08271 NY RA 023719-1
Warren W. Winter, AIA
NJ RA AI 06853 NY RA 010562-1

CONSTRUCTION PROGRAM FOR THE
MARSHALL STREET ELEMENTARY SCHOOL
DOE# 4010-N01-02-0169
NJSDA# PA-0006-C04
DCA# OLCEHPC-05--013 ERU# 6095-05
ADDRESS
NJSDA
1 WEST STATE STREET
TRENTON, NEW JERSEY

PROJECT NO.: 2012-213.00

ISSUED
05/15/09 ISSUED FOR BID
07/06/09 ISSUED FOR BID
1 08/06/09 DCA REVIEW COMMENTS
2 05/05/10 DCA REVIEW COMMENTS
9 12/17/12 SDA AMENDMENTS 11 & 12
10 03/25/13 ADDENDUM NO. 2

DRAWING TITLE
BUILDING AND WALL SECTIONS

DRAWING No.
A-4.0
DWG. NO. OF

Drawing name: P:\2012\2012-213.00 Marshall St Elementary - Restart\DRAWINGS\Condocs\A4_WALL SECTIONS\213-A4.0.dwg Plotted By: MFERRAGAMO Mar 25, 2013 - 6:08pm

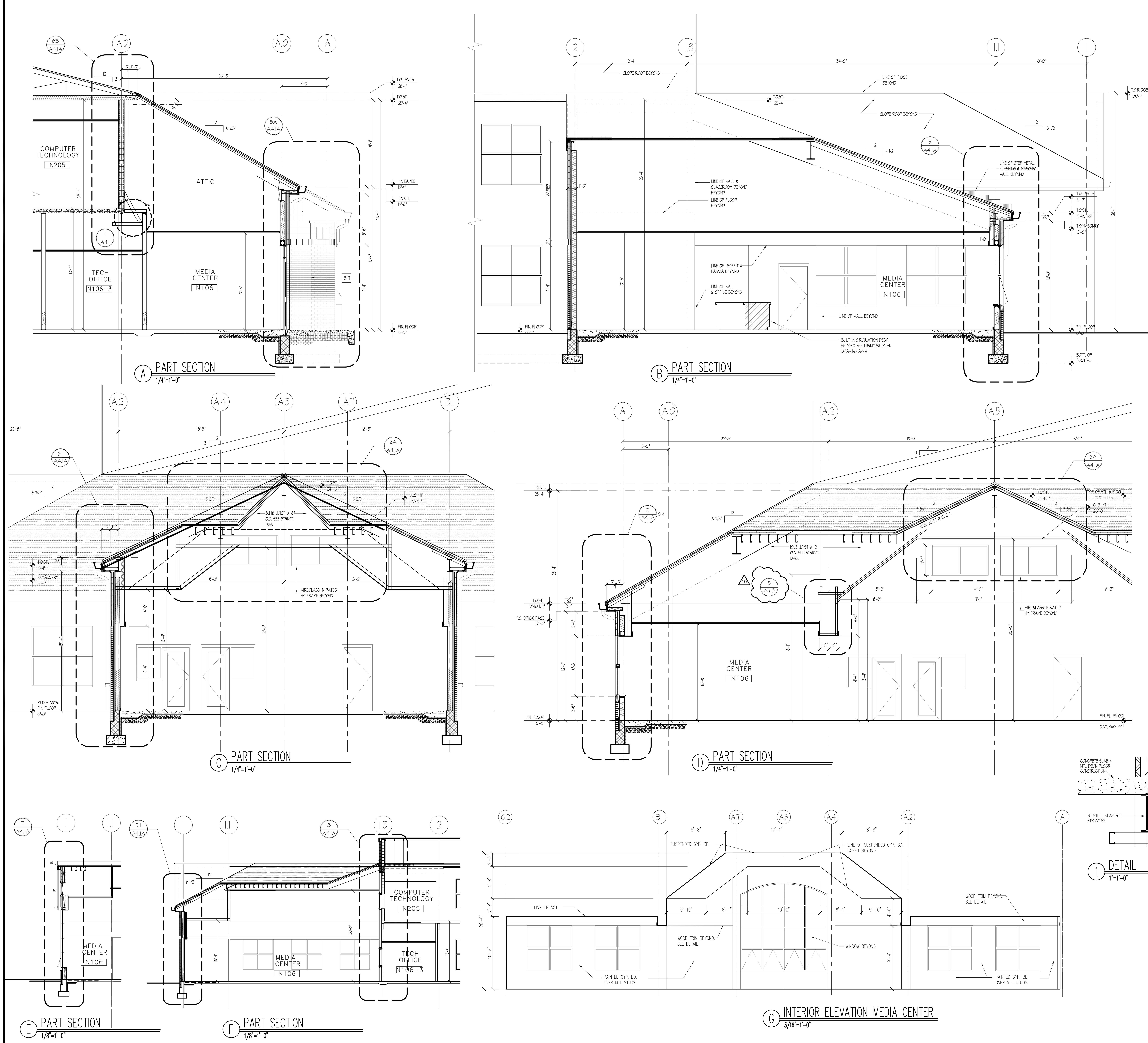

KEYED WALL SECTION NOTES:

1. CONCRETE SLAB ON VAPOR BARRIER OVER CRUSHED STONE. SEE STRUCTURAL DWGS. FOR MORE INFO. (TYP)
2. 2" THK. PERIMETER FOUNDATION WALL INSULATION
3. LINE OF BRICK SHELF @ FOUNDATION WALL TO REMAIN 8" MIN. BELOW GRADE COORDINATE GRADE W/ SITE / CIVIL PLANS AND VERIFY ACTUAL CONDITIONS IN FIELD (TYP.)
4. LINE OF THROUGH WALL FLASHING W/ TUBULAR WEEPS @ 24" oc TO REMAIN ABOVE GRADE. COORDINATE W/ SITE/CIVIL PLANS AND VERIFY ACTUAL CONDITIONS IN FIELD (TYP.)
5. PROVIDE "PEA" GRAVEL IN CAVITY MIN. 8" ABOVE THROUGH WALL FLASHING (TYP.)
6. 1/2" THICK PRE MOLDED JOINT FILLER @ PERIMETER OF CONCRETE SLABS W/ BACKER ROD AND CONTINUOUS BEAD OF SEALANT. COORDINATE W/ STRUCTURAL DWG.
7. FINISHED FLOORING AND RESILIENT BASE (TYP.) COORDINATE W/ FIN. SCHEDULE
8. PRE FINISHED ALUMINUM ARCHITECTURAL LOUVER. COORDINATE WITH MECHANICAL DRAWINGS.
9. THROUGH WALL FLASHING W/ END DAMS ABOVE MASONRY OPENING W/ WEEPS @ 24" oc.
10. STEEL LINTELS, COORDINATE W/ STRUCT DWG.
11. GALVANIZED STEEL LINTELS, PAINTED @ EXTERIOR OPNINGS. SIZES SEE STRUCT DWG.
12. 8" C.M.U. WALL W/ HORIZONTAL GALVANIZED STEEL REINFORCING @ 16" O.C.
13. 6" C.M.U. WALL W/ HORIZONTAL GALVANIZED STEEL REINFORCING @ 16" O.C.
14. FIRE RATED 12" C.M.U. WALL W/ HORIZONTAL GALVANIZED STEEL REINFORCING @ 16" O.C.
15. TYPICAL EXTERIOR "BRICK/BLOCK"WALL SYSTEM. 4" BRICK FACE W/2" AIR SPACE W/ CAVITY WALL INSULATION BOARD 1 1/2" THK & 8" C.M.U. BACKUP OR 12" C.M.U. BACK U SEE PLAN. HORIZONTAL GALVANIZED WIRE REI FORCING @ 16" O.C. (TYP.) SEE STRUCT. DWG. FOR VERTICAL STEEL REINFORCEMENT WHERE REQUIRED.
16. 6" METAL STUD 16 GA. 16" O.C. & 5/8" EXTER. GRADE GYP BD SHEATHING R-19 FIBERGLASS BATT INSULATION
17. CAVITY WALL INSULATION CLIP/ BRICK TIES @ 16" O.C. VERTICALLY AND HORIZONTALLY (TYP.)
18. CONC. SLAB W/ METAL DECK ON WF FRAMING SYSTEM. SEE STRUCT DWG
19. SPRAYED FIRE PROOFING FOR 1 HR. FIRE RATING REQUIREMENTS
20. STEEL WF BEAM / BAR JOIST/METAL DECK ROOF FRAMING SYSTEM REFER STRUCT. DWGS.
21. STEEL WF BEAM / STEEL TRUSS /METAL DECK ROOF FRAMING SYSTEM REFER STRUCT. DWGS.
22. PREENGINEERED LIGHT GA.METAL STUD TRUSS SYSTEM & 9/16" GALV.METAL DECK BY USD INC. ROOF FRAMING SYSTEM REFER STRUCT. DWGS.
23. CEILING SYSTEM (TYP) REFER TO REFLECTED CEILING PLANS
24. SUSPENDED GYP. BD. CEILING, FASCIA & SOFFIT SYSTEMS (TYP.) REFER REFLECTED CEILING PLAN
25. ALUMINUM WINDOW - COORDINATE W/ SPECIFICATIONS, ELEVATIONS, WALL SECTIONS & FLOOR PLANS
26. GLAZED CURTAIN WALL SYSTEM
27. CONTINUOUS P.T. WOOD BLOCKING SECURED TO TOP OF MASONRY BY 3/8" X 8" ANCHOR BOLTS @ 2'-8" O.C. (TYP.)
28. ROOFING SYSTEM OVER 3" MIN. TAPERED INSULATION TYP. OR OVER 3" UNIFORM INSULATION).
29. ASPHALT ROOF SHINGLES OVER 2 PLY FELT UNDERLAYMENT OVER VENTILATED NAILBASE OVER 3-INCH THICK RIGID INSULATION OVER 1/2" PROTECTION BOARD OVER METAL DECK. PROVIDE ICE AND WATERSHIELD AT EAVES, VALLEYS, HIPS, RIDGE AND PENETRATIONS. APPLY VAPOR BARRIER (PEEL & STICK ICE AND WATER SHIELD) OVER 1/2" PROTECTION BOARD
29.1 ASPHALT ROOF SHINGLES OVER 2 PLY FELT UNDERLAYMENT ON VENTILATED NAILBASE OVER 3" THICK RIGID INSULATION OVER 5/8" FIRE RETARDANT BASE SHEATHING. PROVIDE ICE AND WATERSHIELD AT EAVES, VALLEYS, HIPS, RIDGE, AND PENETRATIONS. APPLY VAPOR BARRIER (ICE & WATER SHIELD OVER 5/8" BASE SHEATHING
30. STANDING SEAM METAL ROOFING OVER 2 PLY FELT UNDERLAYMENT OVER 3/4" EXTERIOR GRADE PLYWOOD SUBSTRATE MECHANICALLY FASTENED TO METAL DECK. PROVIDE INTERGRAL FLAT PLATE AT TOP OF DECK FOR FASTENING. SCREWS TO LAND IN CLOSED CELL OF DECK SO AS NOT TO BE EXPOSED FROM UNDERSIDE OF CANOPY
30.1 STANDING SEAM METAL ROOF W/TRIMS @ PERIMETER OVER METAL DECK ON STEEL TRUSS SYSTEM. PRIMED AND PAINTED, SIMILAR TO EXTERIOR TRUSSSYSTEM @ VESTIBULE
31. PREFIN. METAL FASCIA/SOFFIT SYSTEM TO MATCH METAL ROOFING W/ 3/4" FURRING CHANNELS/ MTL STUD FRAMING BRACE TO STRUCT. AND/ OR MASONRY.
31.1 PREFINISHED ALUM. GUTTER
31.2 PREFINISHED ALUM. DOWNSPOUT - SEE ELEVATIONS
31.3 CAST IRON DOWNSPOUT BOOT. J.R. SMITH MODEL No. 1786-24 OR APPROVED EQUAL. PRIME & FIN. PAINT. PROVIDE N-12 HIGH DENSITY POLYURETHANE PIPE (ADS). INCLUDE ALL FITTINGS, ADAPTERS, BENDS & HARDWARE NECESSARY TO COMPLETE DOWNSPOUT SYSTEM.
32. ICE/SNOW GUARD AT EAVES NEAR GUTTER @ SLOPING METAL ROOF. SPACING TO BE BY MFR'S STANDARD.
33. ASPHALT & COMPOSITE SHINGLES OVER 5/8" FIRE RETARDANT PLYWOOD SHEATHING AND 15LB ASPHALT FELT UNDERLAYMENT. FOR EAVES, VALLEYS & RIDGE FLASHING REQUIREMENTS REFER TO SPECS. & DETAILS ON DWGS. 2 SERIES. PROVIDE METAL DRIP EDGE AT EAVES.
33A STANDING METAL SEAM ROOF ASSEMBLY OVER 3" RIGID INSULATION (2LB/CU.FT.MIN. DENSITY) OVER 1/2" PROTECTION BOARD OVER METAL DECKING. APPLY VAPOR BARRIER (PEEL & STICK ICE AND WATER SHIELD) OVER 1/2" PROTECTION BOARD
34. CONTINUOUS ALUMINUM MANUFACTURED ROOF EDGE/ GRAVEL STOP SYSTEM (TYP.)
35. CONTINUOUS ALUMINUM MANUFACTURED COPING SYSTEM (TYP.)
36. KAL-WAL
37. 5/4" THICK WOOD (CLEAR POPLAR) WINDOW WILL, PRIME & PAINTED
38. PRE-FINISHED STANDING SEAM ROOF W/ METAL FASCIA/SOFFIT & ALUM. GUTTER & DOWN SPOUT OVER EXTR. GRADE PLYWOOD SHEATHING & 15 LB ASPHALT FELT UNDERLAYMENT SUPPORTED ON LIGHT GA. METAL STUD FRAMING SYSTEM.
39. FILL BLOCK VENEER AT WINDOWS W/ GRANULAR INSULATION (TYP)
40. FILL C.M.U. CORES SOLID CONTINUOUS AT ALL TRANSITIONS(TYP).
41. 6" (R-30) FIBERGLASS BATT INSULATION W/ RETAINER SECURED TO BOTTOM CHORD OF TRUSS (TYP.)
42. 1/2" GYP. BOARD PRIMED & PAINTED OVER METAL STUD FRAMING ON 16" O.C.
43. 5/8" REINF. GYP. BOARD PRIMED & PAINTED OVER METAL STUD FRAMING ON 16" O.C.
44. PREFINISHED ALUM. ENTRY DOORS & FRAMING SYSTEM. SEE DOOR SCHEDULE & DETAILS
45. RECESSED BRICK SOLDIER OR GFB VENEER ACCENT BAND. REFER TO ELEVATION
46. FOUNDATION WALL & REINF. CONC. FOOTING. REFER TO FOUNDATION PLAN-STRUCT. DWG.
47. APPROX. FIN. GRADE-REFER TO SITE GRADING PLAN
48. WF STEEL BEAM REFER TO STRUCT. DWGS.
49. 4" HIGH VINYL BASE
50. COLD APPLIED, SPRAYED-ON WATERPROOFING SYSTEM FULL HEIGHT ON FOUNDATION WALL-TIE INTO SLAB SYSTEM
51. 6"Ø PVC PERFORATED PERIMETER DRAIN W/ FILER FABRIC IN 12" GRAVEL SURROUND. COORD. W/ CIVIL
52. PRECAST 8" TERRAZZO BASE
53. PRECAST TERRAZZO TILE FLOORING
54. CERAMIC TILE FINISH OVER WATER RESISTANCE GYP. BD AT MTL STUD WALL.
55. 1/2" GYP. BD. @ UNDERSIDE OF TRUSS ABOVE CORRIDOR ONLY.
56. 1/2" GYP. BD. FULL HEIGHT @ CORRIDOR ONLY
57. SUSPENDED 1/2" GYP. BOARD PRIMED & PAINTED HUNG FROM STRUCTURE ABOVE
58. TYPICAL NOTE:WOOD FASCIA, BLOCKING, ROOF SHEATHING AND WOOD FILLERS SHALL BE FIRE RETARDANT TREATED WOOD
59. 1/2" BACKER ROD AND CHAULK CONTROL JOINT
60. PRE-APPLIED INTERGRALLY BONDED SHEET MEMBRANE WATERPROOFING SYSTEM - TIE INTO FOUNDATION WALL SYSTEM

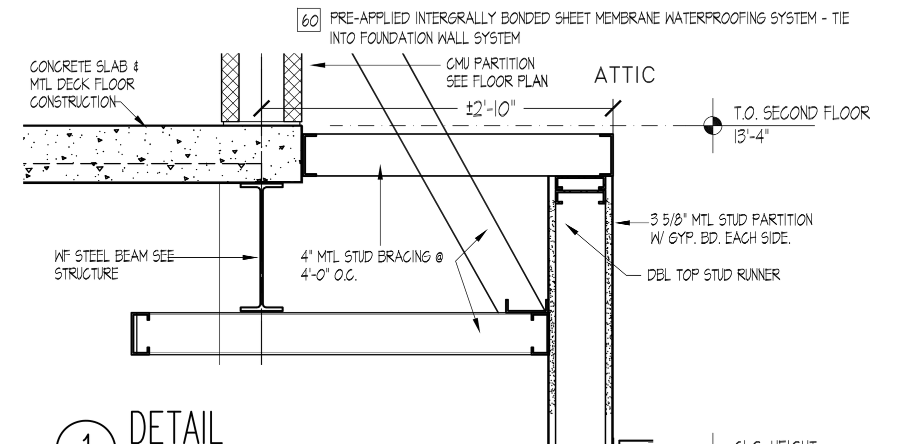

1 DETAIL
1"=1'-0"

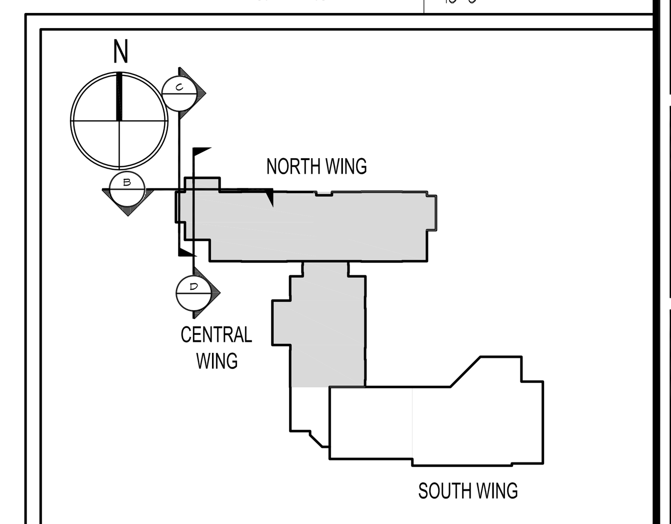

KEY PLAN
N.T.S.

SDA

NJ SCHOOLS DEVELOPMENT AUTHORITY

STATE OF NEW JERSEY

ECONOMIC DEVELOPMENT AUTHORITY

Design Ideas Group
architecture + planning, llc
15 Bethany Street
New Brunswick, NJ 08901
T: 732.249.6242
F: 732.247.1825
60 West Broad Street
Bethlehem, PA 18018
T: 610.807.0420
F: 610.807.0602

Richard D. Alderiso, AIA
NJ RA AI 15023 NY RA 027416

Robert M. Iamello, AIA
NJ RA 08585 NY RA 018723 DE RA S5-0006594 NH RA 2813

Vincent A. Myers, AIA
NJ RA AI 11415

Joseph P. Tomaino, AIA PP
NJ RA C6086 NJ PP 2442 PA RA B6732 CT RA 9650
DC RA ARC100054 DE RA S5-0006679 MD RA 8887
VA RA 0401011785 VT RA 03-0001370

Jeffrey D. Venezia, AIA
NJ RA AI 08271 NY RA 023719-1

Warren W. Winter, AIA
NJ RA AI 06853 NY RA 010562-1

CONSTRUCTION PROGRAM FOR THE

MARSHALL STREET ELEMENTARY SCHOOL

DOE# 4010-N01-02-0169
NJSDA# PA-0006-C03
DCA# OLCEHPC-05--013 ERU# 6095-05

ADDRESS
NJ SDA
WEST STATE STREET
TRENTON, NEW JERSEY

JOB NO. 23110

ISSUED
05/15/09 ISSUED FOR BID
07/06/09 ISSUED FOR BID
1 08/06/09 DCA REVIEW COMMENTS
10 03/25/13 ADDENDUM NO. 2

DRAWING TITLE
BUILDING AND WALL SECTIONS MEDIA CENTER

DRAWING No.
A-4.1

DWG. NO. OF

Drawing name: P:\2012\2012-213.00 Marshall St Elementary - Restart\DRAWINGS\Condocs\A4_WALL SECTIONS\213-A4.1.dwg Plotted By : MFERRAGAMO Mar 25, 2013 - 6:08pm

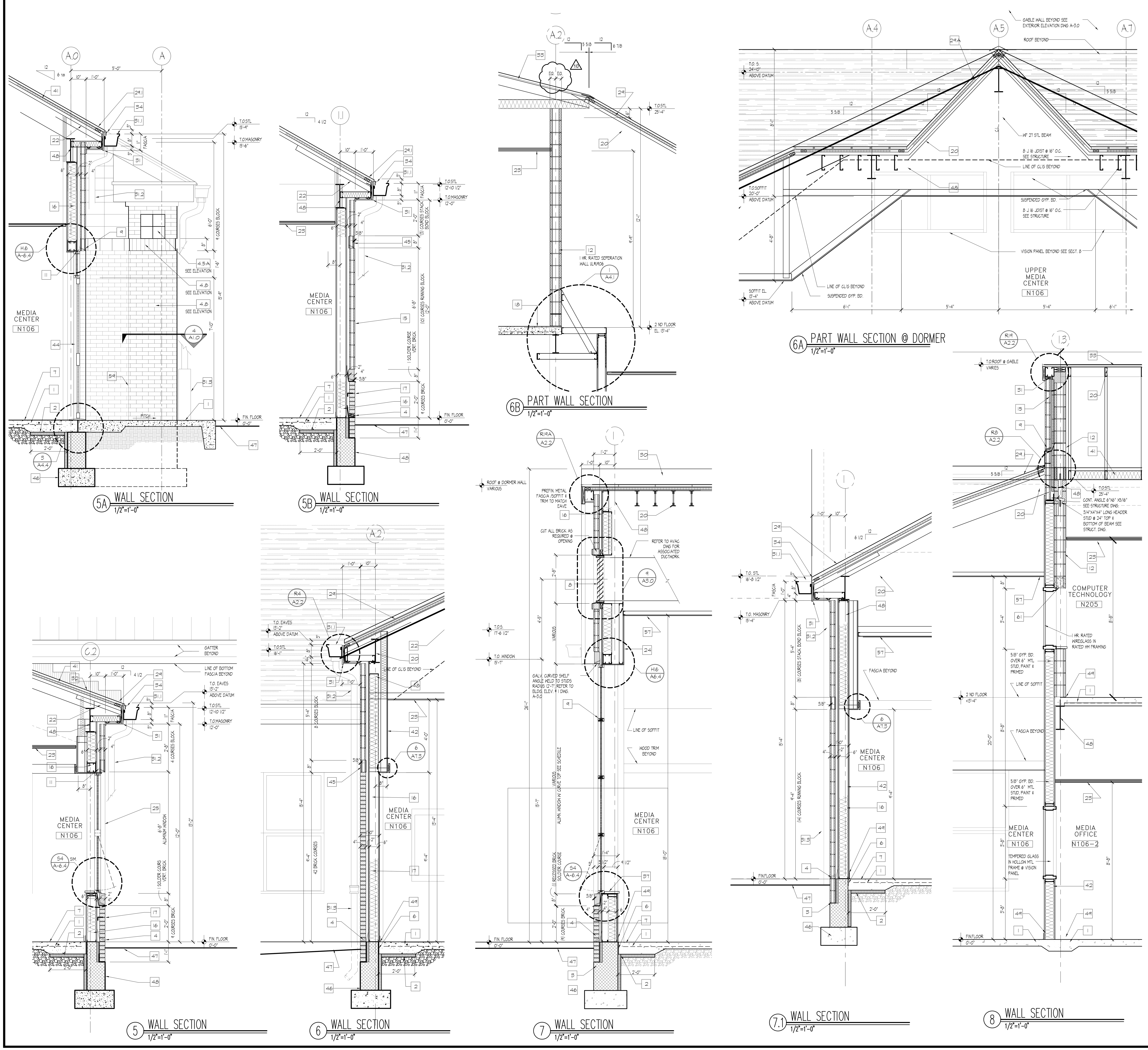

KEYED WALL SECTION NOTES:

1. CONCRETE SLAB ON VAPOR BARRIER OVER CRUSHED STONE. SEE STRUCTURAL DWGS. FOR MORE INFO. (TYP)
2. 2" THK. PERIMETER FOUNDATION WALL INSULATION
3. LINE OF BRICK SHELF @ FOUNDATION WALL TO REMAIN 8" MIN. BELOW GRADE COORDINATE GRADE W/ SITE / CIVIL PLANS AND VERIFY ACTUAL CONDITIONS IN FIELD (TYP.)
4. LINE OF THROUGH WALL FLASHING w/ TUBULAR WEEPS @ 24" oc TO REMAIN ABOVE GRADE. COORDINATE W/ SITE/CIVIL PLANS AND VERIFY ACTUAL CONDITIONS IN FIELD (TYP.)
5. PROVIDE "PEA" GRAVEL IN CAVITY MIN. 8" ABOVE THROUGH WALL FLASHING (TYP.)
6. 1/2" THICK PRE MOLDED JOINT FILLER @ PERIMETER OF CONCRETE SLABS W/ BACKER ROD AND CONTINUOUS BEAD OF SEALANT. COORDINATE W/ STRUCTURAL DWG.
7. FINISHED FLOORING AND RESILIENT BASE (TYP.) COORDINATE W/ FIN. SCHEDULE
8. PRE FINISHED ALUMINUM ARCHITECTURAL LOUVER. COORDINATE WITH MECHANICAL DRAWINGS .
9. THROUGH WALL FLASHING W/ END DAMS ABOVE MASONRY OPENING W/ WEEPS @ 24" oc.
10. STEEL LINTELS, COORDINATE W/ STRUCT DWG.
11. GALVANIZED STEEL LINTELS, PAINTED @ EXTERIOR OPNINGS . SIZES SEE STRUCT DWG.
12. 8" C.M.U. WALL W/ HORIZONTAL GALVINIZED STEEL REINFORCING @ 16" O.C.
13. 6" C.M.U. WALL W/ HORIZONTAL GALVINIZED STEEL REINFORCING @ 16" O.C.
14. FIRE RATED 12" C.M.U. WALL W/ HORIZONTAL GALVINIZED STEEL REINFORCING @ 16" O.C.
15. TYPICAL EXTERIOR "BRICK/BLOCK"WALL SYSTEM: 4" BRICK FACE W/2" AIR SPACE W/ CAVITY WALL INSULATION BOARD 1 1/2" THK & 8" C.M.U. BACKUP OR 12" C.M.U. BACK U ,SEE PLAN. HORIZONTAL GALVANIZED WIRE REI FORCING @ 16" O.C. (TYP.) SEE STRUCT. DWG. FOR VERTICAL STEEL REINFORCEMENT WHERE REQUIRED.
16. 6" METAL STUD 16 GA. 16" O.C. & 5/8" EXTER. GRADE GYP BD SHEATHING R-19 FIBERGLASS BATT INSULATION
17. CAVITY WALL INSULATION CLIP/ BRICK TIES @ 16" O.C. VERTICALLY ANd HORIZONTALLY (TYP.)
18. CONC. SLAB W/ METAL DECK ON WF FRAMING SYSTEM. SEE STRUCT DWG
19. SPRAYED FIRE PROOFING FOR 1 HR. FIRE RATING REQUIREMENTS
20. STEEL WF BEAM / BAR JOIST/METAL DECK ROOF FRAMING SYSTEM REFER STRUCT. DWGS.
21. STEEL WF BEAM / STEEL TRUSS /METAL DECK ROOF FRAMING SYSTEM REFER STRUCT. DWGS.
22. PREENGIENEERED LIGHT GA.METAL STUD TRUSS SYSTEM & 9/16" GALV.METAL DECK BY USD INC. ROOF FRAMING SYSTEM REFER STRUCT. DWGS.
23. CEILING SYSTEM(TYP) REFER TO REFLECTED CEILING PLANS
24. SUSPENDED GYP. BD. CEILING, FASCIA & SOFFIT SYSTEMS (TYP.) REFER REFLECTED CEILING PLAN
25. ALUMINUM WINDOW - COORDINATE W/ SPECIFICATIONS, ELEVATIONS, WALL SECTIONS & FLOOR PLANS
26. GLAZED CURTAIN WALL SYSTEM
27. CONTINUOUS P.T. WOOD BLOCKING SECURED TO TOP OF MASONRY BY 3/8" X 8" ANCHOR BOLTS @ 2'-8" O.C. (TYP.)
28. ROOFING SYSTEM OVER 3" MIN. TAPERED INSULATION(TYP. OR OVER 3" UNIFORM INSULATION).
29. ASPHALT ROOF SHINGLES OVER 2 PLY FELT UNDERLAYMENT OVER VENTILATED NAILBASE OVER 3-INCH THICK RIGID INSULATION OVER 1/2" PROTECTION BOARD OVER METAL DECK. PROVIDE ICE AND WATERSHIELD AT EAVES, VALLEYS. HIPS, RIDGE AND PENETRATIONS. APPLY VAPOR BARRIER (PEEL & STICK ICE AND WATER SHIELD) OVER 1/2" PROTECTION BOARD

29.1 ASPHALT ROOF SHINGLES OVER 2 PLY FELT UNDERLAYMENT ON VENTILATED NAILBASE OVER 3" THICK RIGID INSULATION OVER 5/8" FIRE RETARDANT BASE SHEATHING. PROVIDE ICE AND WATERSHIELD AT EAVES, VALLEYS, HIPS, RIDGE, AND PENETRATIONS. APPLY VAPOR BARRIER (ICE & WATER SHIELD OVER 5/8" BASE SHEATHING

30 STANDING SEAM METAL ROOFING OVER 2 PLY FELT UNDERLAYMENT OVER 3/4" EXTERIOR GRADE PLYWOOD SUBSTRATE MECHANICALLY FASTENED TO METAL DECK. PROVIDE INTERGRAL FLAT PLATE AT TOP OF DECK FOR FASTENING. SCREWS TO LAND IN CLOSED CELL OF DECK SO AS NOT TO BE EXPOSED FROM UNDERSIDE OF CANOPY

30.1 STANDING SEAM METAL ROOF W/TRIMS @ PERIMETER OVER METAL DECK ON STEEL TRUSS SYSTEM. PRIMED AND PAINTED, SIMILAR TO EXTERIOR TRUSSSYSTEM @ VESTIBULE

31 PREFIN. METAL FASCIA/SOFFIT SYSTEM TO MATCH METAL ROOFING W/ 3/4" FURRING CHANNELS/ MT'L STUD FRAMING BRACE TO STRUCT. AND/ OR MASONRY.

31.1 PREFINISHED ALUM. GUTTER

31.2 PREFINISHED ALUM. DOWNSPOUT - SEE ELEVATIONS

31.3 CAST IRON DOWNSPOUT BOOT. J.R. SMITH MODEL No. 1786-24 OR APPROVED EQUAL. PRIME & FIN. PAINT. PROVIDE N-12 HIGH DENSITY POLYURETHANE PIPE (ADS). INCLUDE ALL FITTINGS, ADAPTERS, BENDS & HARDWARE NECESSARY TO COMPLETE DOWNSPOUT SYSTEM.

32 ICE/SNOW GUARD AT EAVES NEAR GUTTER @ SLOPING METAL ROOF. SPACING TO BE BY MFR'S STANDARD.

33 ASPHALT & COMPOSITE SHINGLES OVER 5/8" FIRE RETARDANT PLYWOOD SHEATHING AND 15LB ASPHALT FELT UNDERLAYMENT. FOR EAVES, VALLEYS & RIDGE FLASHING REQUIREMENTS REFER TO SPECS. & DETAILS ON DWGS. 2 SERIES. PROVIDE METAL DRIP EDGE AT EAVES.

33A STANDING METAL SEAM ROOF ASSEMBLY OVER 3" RIGID INSULATION (2LB/CU.FT.MIN. DENSITY) OVER 1/2" PROTECTION BOARD OVER METAL DECKING. APPLY VAPOR BARRIER (PEEL & STICK ICE AND WATER SHIELD) OVER 1/2" PROTECTION BOARD

34 CONTINUOUS ALUMINUM MANUFACTURED ROOF EDGE/ GRAVEL STOP SYSTEM (TYP.)

35 CONTINUOUS ALUMINUM MANUFACTURED COPING SYSTEM (TYP.)

36 KAL-WAL

37 5/4" THICK WOOD (CLEAR POPLAR) WINDOW WILL; PRIME & PAINTED

38 PRE-FINISHED STANDING SEAM ROOF W/ METAL FASCIA/SOFFIT & ALUM. GUTTER & DOWN SPOUT OVER EXTR. GRADE PLYWOOD SHEATHING & 15 LB ASPHALT FELT UNDERLAYMENT SUPPORTED ON LIGHT GA. METAL STUD FRAMING SYSTEM.

39 FILL BLOCK VENEER AT WINDOWS W/ GRANULAR INSULATION (TYP)

40 FILL C.M.U. CORES SOLID CONTINUOUS AT ALL TRANSITIONS(TYP).

41 6" (R-30) FIBERGLASS BATT INSULATION W/ RETAINER SECURED TO BOTTOM CHORD OF TRUSS (TYP.)

42 1/2" GYP. BOARD PRIMED & PAINTED OVER METAL STUD FRAMING ON 16" O.C.

43 5/8" REINF. GYP. BOARD PRIMED & PAINTED OVER METAL STUD FRAMING ON 16" O.C.

44 PREFINISHED ALUM. ENTRY DOORS & FRAMING SYSTEM. SEE DOOR SCHEDULE & DETAILS

45 RECESSED BRICK SOLDIER OR GFB VENEER ACCENT BAND. REFER TO ELEVATION

46 FOUNDATION WALL & REINF. CONC. FOOTING. REFER TO FOUNDATION PLAN-STRUCT. DWG.

47 APPROX. FIN. GRADE-REFER TO SITE GRADING PLAN

48 WF STEEL BEAM REFER TO STRUCT. DWGS.

49 4" HIGH VINYL BASE

50 COLD APPLIED, SPRAYED-ON WATERPROOFING SYSTEM FULL HEIGHT ON FOUNDATION WALL-TIE INTO SLAB SYSTEM

51 6"φ PVC PERFORATED PERIMETER DRAIN W/ FILER FABRIC IN 12" GRAVEL SURROUND. COORD. W/ CIVIL

52 PRECAST 8" TERRAZZO BASE

53 PRECAST TERRAZZO TILE FLOORING

54 CERAMIC TILE FINISH OVER WATER RESISTANCE GYP. BD AT MTL STUD WALL.

55 1/2" GYP. BD. @ UNDERSIDE OF TRUSS ABOVE CORRIDOR ONLY.

56 1/2" GYP. BD. FULL HEIGHT @ CORRIDOR ONLY

57 SUSPENDED 1/2" GYP. BOARD PRIMED & PAINTED HUNG FROM STRUCTURE ABOVE

58 TYPICAL NOTE:WOOD FASCIA, BLOCKING, ROOF SHEATHING AND WOOD FILLERS SHALL BE FIRE RETARDANT TREATED WOOD

61 PRECAST CONCRETE LINTEL

59 1/2" BACKER ROD AND CHAULK CONTROL JOINT

60 PRE-APPLIED INTERGRALLY BONDED SHEET MEMBRANE WATERPROOFING SYSTEM - TIE INTO FOUNDATION WALL SYSTEM

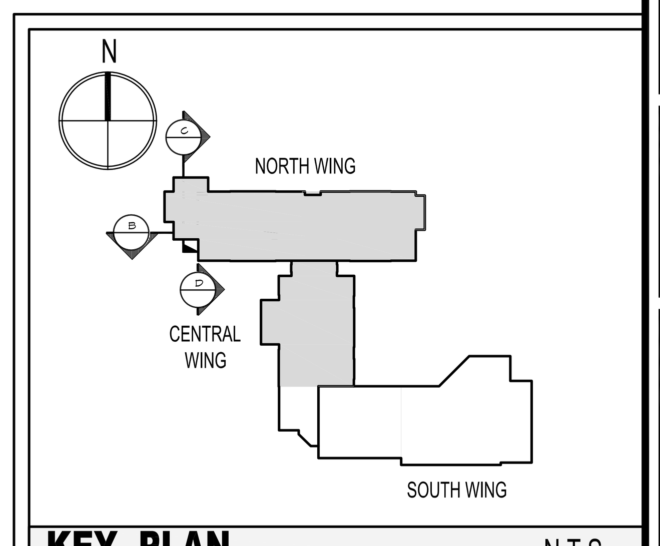

KEY PLAN N.T.S.

SDA

NJ SCHOOLS DEVELOPMENT AUTHORITY

STATE OF NEW JERSEY

ECONOMIC DEVELOPMENT AUTHORITY

DesignIdeasGroup architecture + planning, llc

15 Bethany Street
New Brunswick, NJ 08901
T: 732.249.6242
F: 732.247.1825

60 West Broad Street
Bethlehem, PA 18018
T: 610.807.0420
F: 610.807.0602

Richard D. Alderiso, AIA
NJ RA AI 15023 NY RA 027416

Robert M. Iamello, AIA
NJ RA 08585 NY RA 018723 DE RA S5-0006594 NH RA 2813

Vincent A. Myers, AIA
NJ RA AI 11415

Joseph P. Tomaino, AIA PP
NJ RA C6086 NJ PP 2442 PA RA B6732 CT RA 9650
DC RA ARC100054 DE RA S5-0006679 MD RA 8887
VA RA 0401011785 VT RA 03-0001370

Jeffrey D. Venezia, AIA
NJ RA AI 08271 NY RA 023719-1

Warren W. Winter, AIA
NJ RA AI 06853 NY RA 010562-1

CONSTRUCTION PROGRAM FOR THE

MARSHALL STREET ELEMENTARY SCHOOL

DOE# 4010-N01-02-0169
NJSDA# PA-0006-C03
DCA# OLCEHPC-05--013 ERU# 6095-05

ADDRESS

NJ SDA
WEST STATE STREET
TRENTON, NEW JERSEY

JOB NO. 23110

ISSUED
05/15/09 ISSUED FOR BID
07/06/09 ISSUED FOR BID
1 08/06/09 DCA REVIEW COMMENTS
9 12/17/12 SDA AMENDMENTS 11 & 12
10 03/25/13 ADDENDUM NO. 2

DRAWING TITLE

BUILDING AND WALL SECTIONS MEDIA CENTER

DRAWING No.

A-4.1A

DWG. NO. OF

Drawing name: P:\2012\2012-213.00 Marshall St Elementary - Restart\DRAWINGS\Condocs\A4_WALL SECTIONS\213-A4.1A.dwg Plotted By : MFERRAGAMO Mar 25, 2013 - 6:07pm

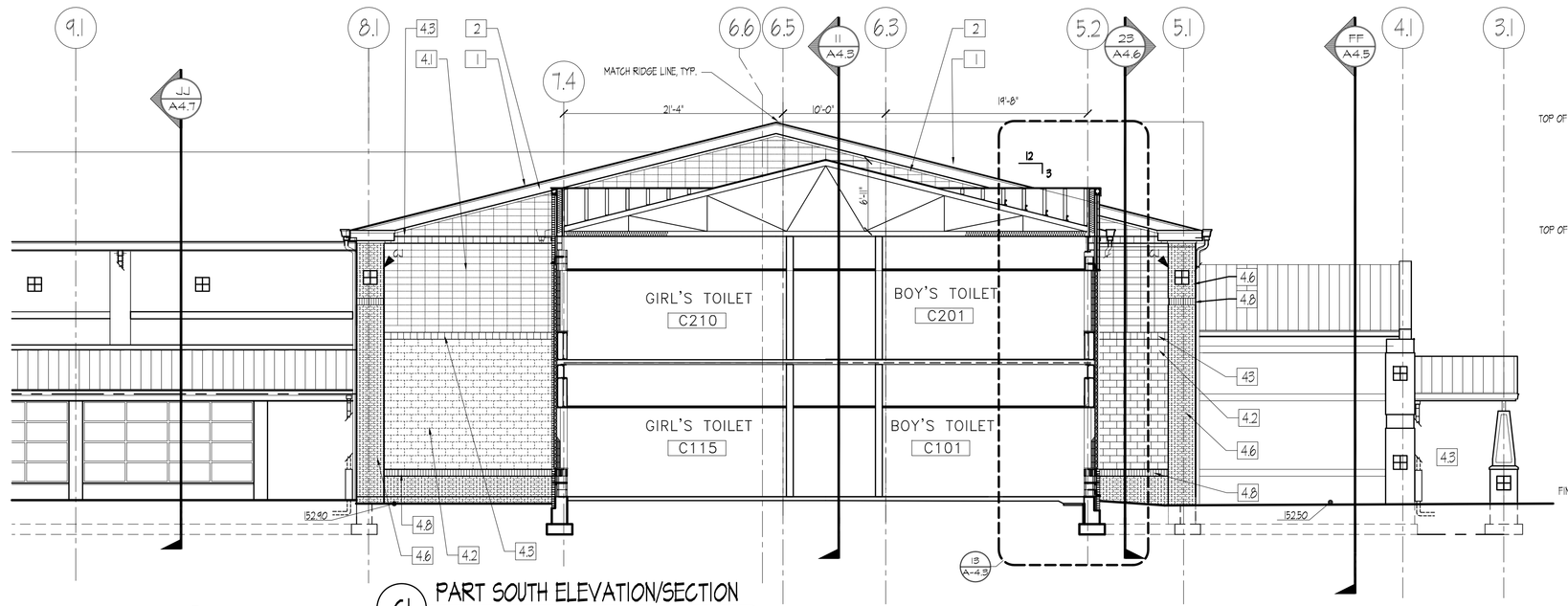

C1 PART SOUTH ELEVATION/SECTION
1/8" = 1'-0"

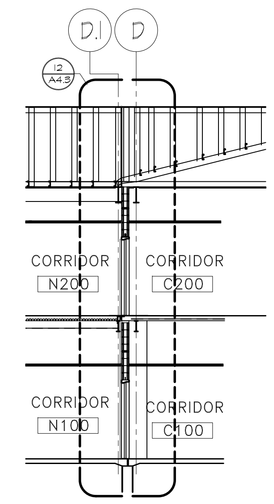

CC PART SECTION @ TOILET BLOCK
1/8" = 1'-0"

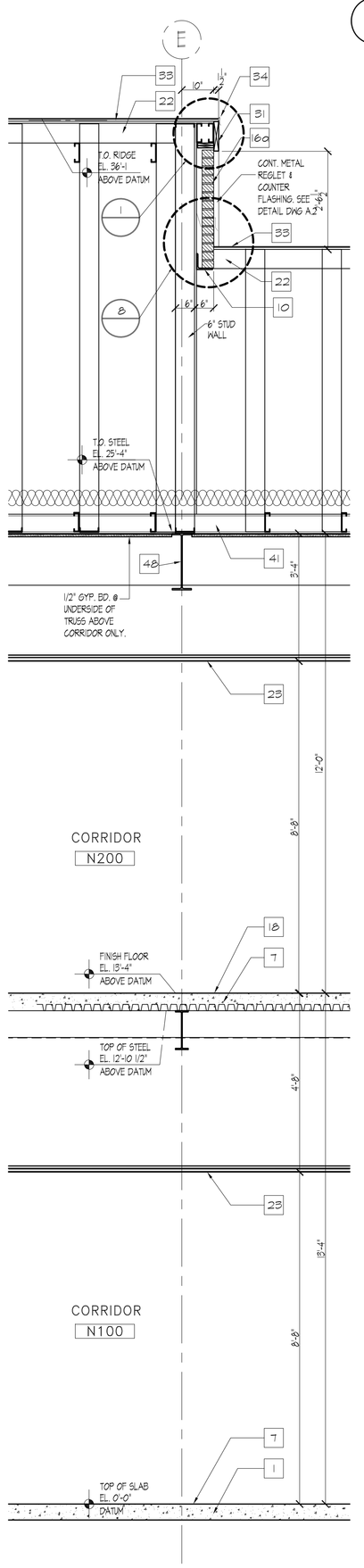

11 WALL SECTION
1/2" = 1'-0"

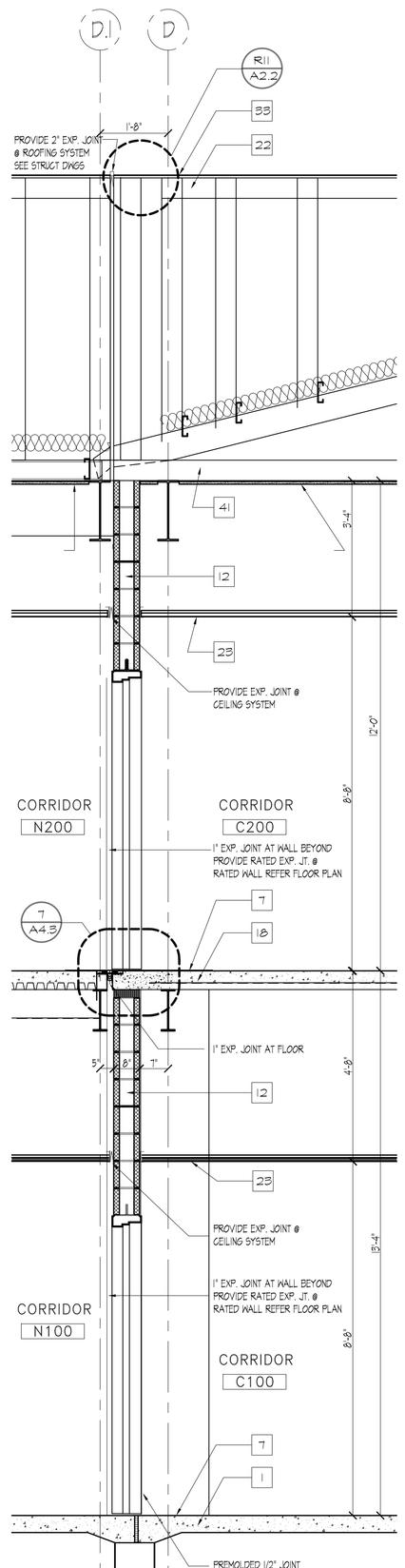

12 WALL SECTION
1/2" = 1'-0"

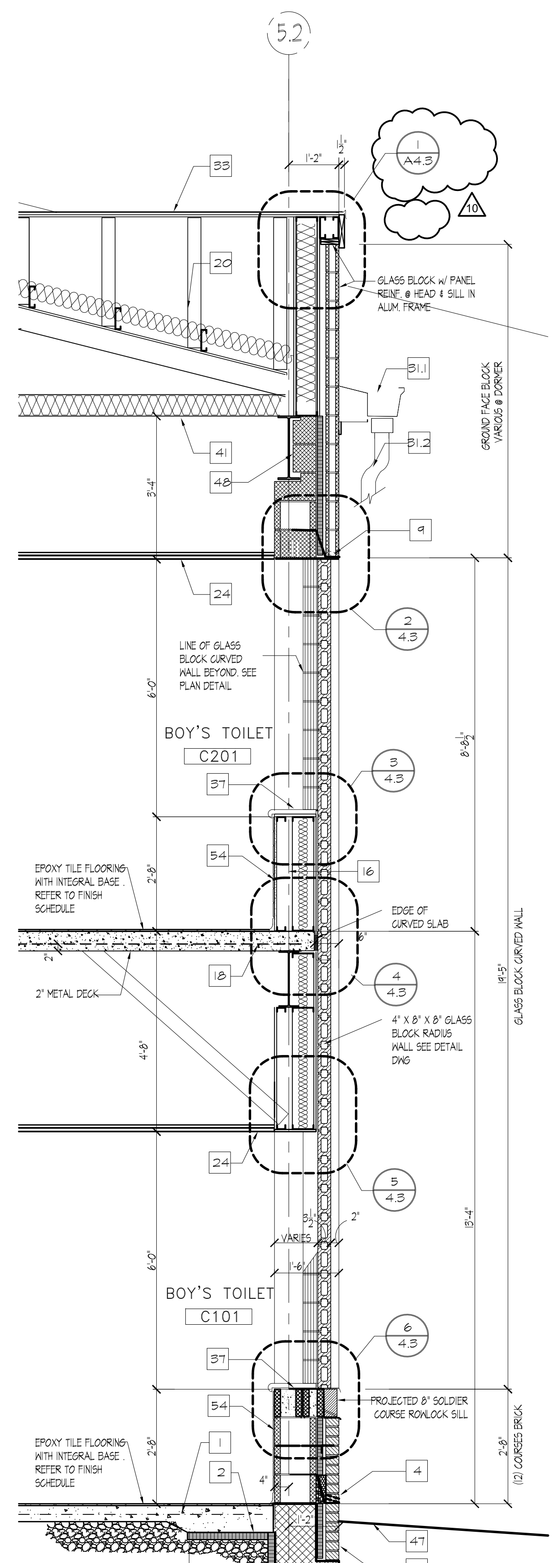

13 WALL SECTION
1/2" = 1'-0"

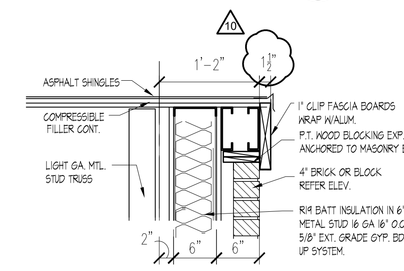

1 DETAIL
1"=1'-0"

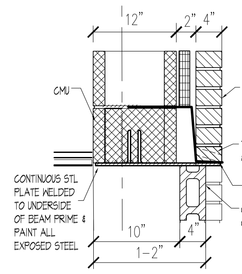

2 DETAIL
1"=1'-0"

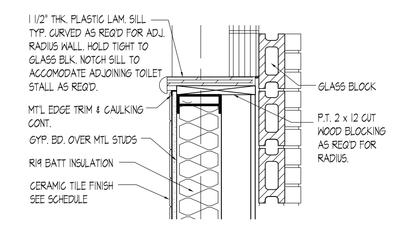

3 DETAIL
1"=1'-0"

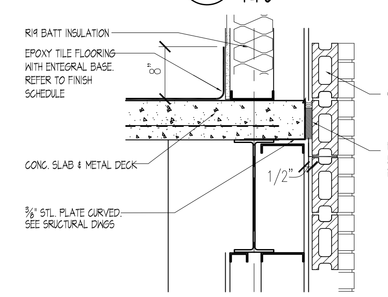

4 DETAIL
1"=1'-0"

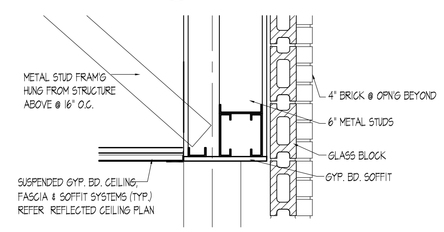

5 DETAIL
1"=1'-0"

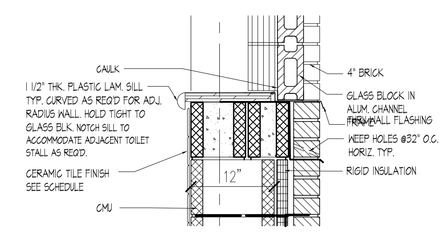

6 DETAIL
1"=1'-0"

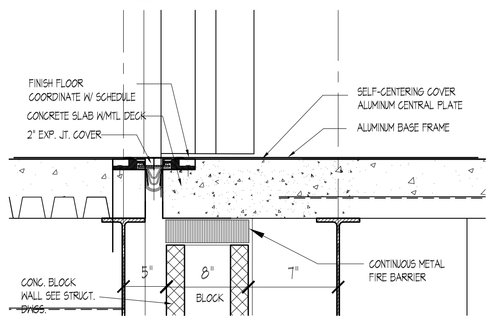

7 EXPANSION JOINT DETAIL
1 1/2"=1'-0"

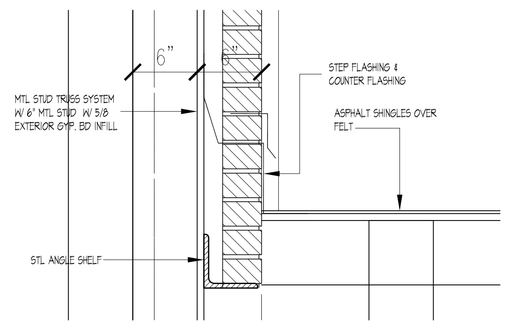

8 DETAIL
1 1/2"=1'-0"

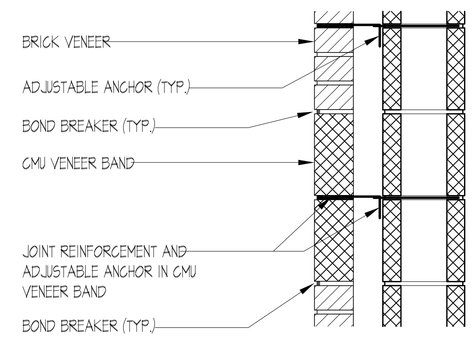

9 TYP. DETAIL @ CONC. MASONRY BAND IN BRICK VENEER
1 1/2"=1'-0"

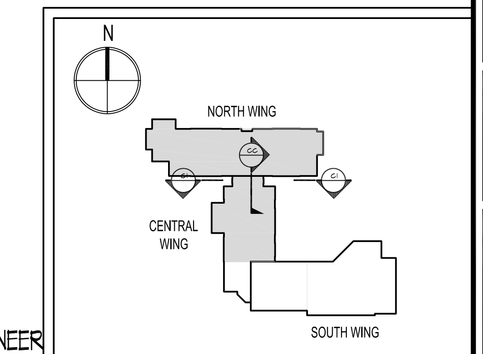

KEY PLAN N.T.S.

KEYED WALL SECTION NOTES:

1. CONCRETE SLAB ON VAPOR BARRIER OVER CRUSHED STONE. SEE STRUCTURAL DWGS. FOR MORE INFO. (TYP)
2. 2" THK. PERIMETER FOUNDATION WALL INSULATION
3. LINE OF BRICK SHELF @ FOUNDATION WALL TO REMAIN 8" MIN. BELOW GRADE COORDINATE GRADE W/ SITE / CIVIL PLANS AND VERIFY ACTUAL CONDITIONS IN FIELD (TYP.)
4. LINE OF THROUGH WALL FLASHING w/ TUBULAR WEEPS @ 24" oc TO REMAIN ABOVE GRADE. COORDINATE W/ SITE/CIVIL PLANS AND VERIFY ACTUAL CONDITIONS IN FIELD (TYP.)
5. PROVIDE 'PEA' GRAVEL IN CAVITY MIN. 8" ABOVE THROUGH WALL FLASHING (TYP.)
6. 1/2" THICK PRE MOLDED JOINT FILLER @ PERIMETER OF CONCRETE SLABS W/ BACKER ROD AND CONTINUOUS BEAD OF SEALANT. COORDINATE W/ STRUCTURAL DWG.
7. FINISHED FLOORING AND RESILIENT BASE (TYP) COORDINATE W/ FIN. SCHEDULE
8. PRE FINISHED ALUMINUM ARCHITECTURAL LOUVER. COORDINATE WITH MECHANICAL DRAWINGS .
9. THROUGH WALL FLASHING W/ END DAMS ABOVE MASONRY OPENING W/ WEEPS @ 24" oc.
10. STEEL LINTELS. COORDINATE W/ STRUCT DWG.
11. GALVANIZED STEEL LINTELS, PAINTED @ EXTERIOR OPNINGS . SIZES SEE STRUCT DWG.
12. 8" C.M.U. WALL W/ HORIZONTAL GALVINIZED STEEL REINFORCING @ 16" O.C.
13. 6" C.M.U. WALL W/ HORIZONTAL GALVINIZED STEEL REINFORCING @ 16" O.C.
14. FIRE RATED 12" C.M.U. WALL W/ HORIZONTAL GALVINIZED STEEL REINFORCING @ 16" O.C.
15. TYPICAL EXTERIOR 'BRICK/BLOCK'WALL SYSTEM. 4" BRICK FACE W/2" AIR SPACE W/ CAVITY WALL INSULATION BOARD 1 1/2" THK & 8" C.M.U. BACKUP OR 12" C.M.U. BACK U SEE PLAN. HORIZONTAL GALVANIZED WIRE REI FORCING @ 16" O.C. (TYP.) SEE STRUCT. DWG. FOR VERTICAL STEEL REINFORCEMENT WHERE REQUIRED.
16. 6" METAL STUD @ GA. @ 6" O.C. & 5/8" EXTER. GRADE GYP BD SHEATHING R-19 FIBERGLASS BATT INSULATION
17. CAVITY WALL INSULATION CLIP/ BRICK TIES @ 16" O.C. VERTICALLY AND HORIZONTALLY (TYP.)
18. CONC. SLAB W/ METAL DECK ON WF FRAMING SYSTEM. SEE STRUCT DWG
19. SPRAYED FIRE PROOFING FOR 1 HR. FIRE RATING REQUIREMENTS
20. STEEL WF BEAM / BAR JOIST/METAL DECK ROOF FRAMING SYSTEM REFER STRUCT. DWGS.
21. STEEL WF BEAM / STEEL TRUSS METAL DECK ROOF FRAMING SYSTEM REFER STRUCT. DWGS.
22. PRENGINEERED LIGHT GA/METAL STUD TRUSS SYSTEM & R/8" GALV.METAL DECK BY USD INC. ROOF FRAMING SYSTEM REFER STRUCT. DWGS.
23. CEILING SYSTEM (TYP) REFER TO REFLECTED CEILING PLANS
24. SUSPENDED GYP. BD. CEILING, FASCIA & SOFFIT SYSTEMS (TYP.) REFER REFLECTED CEILING PLAN
25. ALUMINUM WINDOW - COORDINATE W/ SPECIFICATIONS, ELEVATIONS, WALL SECTIONS & FLOOR PLANS
26. GLAZED CURTAIN WALL SYSTEM
27. CONTINUOUS P.T. WOOD BLOCKING SECURED TO TOP OF MASONRY BY 3/8" X 8" ANCHOR BOLTS @ 2'-8" O.C. (TYP.)
28. ROOFING SYSTEM OVER 3" MIN. TAPERED INSULATION (TYP. OR OVER 3" UNIFORM INSULATION).
29. ASPHALT ROOF SHINGLES OVER 2 PLY FELT UNDERLAYMENT OVER VENTILATED NAILBASE OVER 3-INCH THICK RIGID INSULATION OVER 1/2" PROTECTION BOARD OVER METAL DECK. PROVIDE ICE AND WATERSHIELD AT EAVES, VALLEYS, HIPS, RIDGE AND PENETRATIONS. APPLY VAPOR BARRIER (PEEL & STICK ICE AND WATER SHIELD) OVER 1/2" PROTECTION BOARD
29A. ASPHALT ROOF SHINGLES OVER 2 PLY FELT UNDERLAYMENT ON VENTILATED NAILBASE OVER 3" THICK RIGID INSULATION OVER 5/8" FIRE RETARDANT BASE SHEATHING. PROVIDE ICE AND WATERSHIELD AT EAVES, VALLEYS, HIPS, RIDGE, AND PENETRATIONS. APPLY VAPOR BARRIER (ICE & WATER SHIELD OVER 5/8" BASE SHEATHING
30. STANDING SEAM METAL ROOFING OVER 2 PLY FELT UNDERLAYMENT OVER 5/4" EXTERIOR GRADE PLYWOOD SUBSTRATE MECHANICALLY FASTENED TO METAL DECK. PROVIDE INTEGRAL FLAT PLATE AT TOP OF DECK FOR FASTENING. SCREWS TO LAND IN CLOSED CELL OF DECK SO AS NOT TO BE EXPOSED FROM UNDERSIDE OF CANOPY
30A. STANDING SEAM METAL ROOF W/TRIMS @ PERIMETER OVER METAL DECK ON STEEL TRUSS SYSTEM. PRIMED AND PAINTED, SIMILAR TO EXTERIOR TRUSSSYSTEM @ VESTIBULE
31. PREFIN. METAL FASCIA/SOFFIT SYSTEM TO MATCH METAL ROOFING W/ 3/4" FURRING CHANNELS/ MTL. STUD FRAMING BRACE TO STRUCT. AND/ OR MASONRY.
31.1. PREFINISHED ALUM. GUTTER
31.2. PREFINISHED ALUM. DOWNSPOUT - SEE ELEVATIONS
31.3. CAST IRON DOWNSPOUT BOOT. J.R. SMITH MODEL No. 1786-24 OR APPROVED EQUAL. PRIME & FIN. PAINT. PROVIDE N-12 HIGH DENSITY POLYURETHANE PIPE (ADS). INCLUDE ALL FITTINGS, ADAPTERS, BENDS & HARDWARE NECESSARY TO COMPLETE DOWNSPOUT SYSTEM.
32. ICE/SNOW GUARD AT EAVES NEAR GUTTER & SLOPING METAL ROOF. SPACING TO BE BY MFR'S STANDARD.
33. ASPHALT & COMPOSITE SHINGLES OVER 5/8" FIRE RETARDANT PLYWOOD SHEATHING AND SLB ASPHALT FELT UNDERLAYMENT. FOR EAVES, VALLEYS & RIDGE FLASHING REQUIREMENTS REFER TO SPECS. & DETAILS ON DWGS. J. SERIES. PROVIDE METAL DRIP EDGE ALL EAVES
33A. STANDING SEAM METAL ROOF ASSEMBLY OVER 3" RIGID INSULATION (2LBS/CUFT MIN. DENSITY) OVER 1/2" PROTECTION BOARD OVER METAL DECKING. APPLY VAPOR BARRIER (PEEL & STICK ICE AND WATER SHIELD) OVER 1/2" PROTECTION BOARD
34. CONTINUOUS ALUMINUM MANUFACTURED ROOF EDGE/ GRAVEL STOP SYSTEM (TYP.)
35. CONTINUOUS ALUMINUM MANUFACTURED COPING SYSTEM (TYP.)
36. KAL-WAL
37. 5/4" THICK WOOD (CLEAR POPLAR) WINDOW WILL; PRIME & PAINTED
38. PRE-FINISHED STANDING SEAM ROOF W/ METAL FASCIA/SOFFIT & ALUM. GUTTER & DOWN SPOUT OVER EXTR. GRADE PLYWOOD SHEATHING & 15 LB ASPHALT FELT UNDERLAYMENT SUPPORTED ON LIGHT GA. METAL STUD FRAMING SYSTEM
39. FILL BLOCK VENEER AT WINDOWS W/ GRANULAR INSULATION (TYP)
40. FILL C.M.U. CORES SOLID CONTINUOUS AT ALL TRANSITIONS(TYP).
41. 6" (R-30) FIBERGLASS BATT INSULATION W/ RETAINER SECURED TO BOTTOM CHORD OF TRUSS (TYP.)
42. 1/2" GYP. BOARD PRIMED & PAINTED OVER METAL STUD FRAMING ON 16" O.C.
43. 5/8" REINF. GYP. BOARD PRIMED & PAINTED OVER METAL STUD FRAMING ON 16" O.C.
44. PREFINISHED ALUM. ENTRY DOORS & FRAMING SYSTEM. SEE DOOR SCHEDULE & DETAILS
45. RECESSED BRICK SOLDIER OR GFB VENEER ACCENT BAND. REFER TO ELEVATION
46. FOUNDATION WALL & REINF. CONC. FOOTING. REFER TO FOUNDATION PLAN-STRUCT. DWG.
47. APPROX. FIN. GRADE-REFER TO SITE GRADING PLAN
48. WF STEEL BEAM REFER TO STRUCT. DWGS.
49. 4" HIGH VINYL BASE
50. COLD APPLIED, SPRAYED-ON WATERPROOFING SYSTEM FULL HEIGHT ON FOUNDATION WALL-TIE INTO SLAB SYSTEM
51. 6"Ø PVC PERFORATED PERIMETER DRAIN W/ FILER FABRIC IN 12" GRAVEL SURROUND. COORD. W/ CIVIL
52. PRECAST 8" TERRAZZO BASE
53. PRECAST TERRAZZO TILE FLOORING
54. CERAMIC TILE FINISH OVER WATER RESISTANCE GYP. BD AT MTL STUD WALL.
55. 1/2" GYP. BD. @ UNDERSIDE OF TRUSS ABOVE CORRIDOR ONLY.
56. 1/2" GYP. BD. FULL HEIGHT @ CORRIDOR ONLY
57. SUSPENDED 1/2" GYP. BOARD PRIMED & PAINTED HUNG FROM STRUCTURE ABOVE
58. TYPICAL NOTE:WOOD FASCIA, BLOCKING, ROOF SHEATHING AND WOOD FILLERS SHALL BE FIRE RETARDANT TREATED WOOD
59. 1/2" BACKER ROD AND CHAULK CONTROL JOINT
60. PRE-APPLIED INTEGRALLY BONDED SHEET MEMBRANE WATERPROOFING SYSTEM - TIE INTO FOUNDATION WALL SYSTEM

SDA
NJ SCHOOLS DEVELOPMENT AUTHORITY

STATE OF NEW JERSEY
ECONOMIC DEVELOPMENT AUTHORITY

DesignIdeasGroup
architecture + planning, llc
15 Bethany Street
New Brunswick, NJ 08901
T: 732.249.6242
F: 732.247.1825
60 West Broad Street
Bethlehem, PA 18018
T: 610.807.0420
F: 610.807.0602

Richard D. Alderiso, AIA
NJ RA AI 15023 NY RA 027416

Robert M. Iamello, AIA
NJ RA AI 08585 NY RA 018723 DE RA S5-0006594 NH RA 2813

Vincent A. Myers, AIA
NJ RA AI 11415

Joseph P. Tomaino, AIA PP
NJ RA C6086 NJ PP 2442 PA RA B6732 CT RA 9650
DC RA ARC100054 DE RA S5-0006679 MD RA 8887
VA RA 0401011785 VT RA 03-0001370

Jeffrey D. Venezia, AIA
NJ RA AI 08271 NY RA 023719-1

Warren W. Winter, AIA
NJ RA AI 06853 NY RA 010562-1

CONSTRUCTION PROGRAM FOR THE
MARSHALL STREET ELEMENTARY SCHOOL
DOE# 4010-N01-02-0169
NJSDA# PA-0006-C03
DCA# OLCEHPC-05-013 ERU# 6095-05
ADDRESS
NJ SDA
WEST STATE STREET
TRENTON, NEW JERSEY

JOB NO. 23110

ISSUED

05/15/09	ISSUED FOR BID
07/06/09	ISSUED FOR BID
08/06/09	DCA REVIEW COMMENTS
12/17/12	SDA AMENDMENTS 11 & 12
03/25/13	ADDENDUM NO. 2

DRAWING TITLE
BUILDING AND WALL SECTIONS

DRAWING No.
A-4.3

DWG. NO. OF

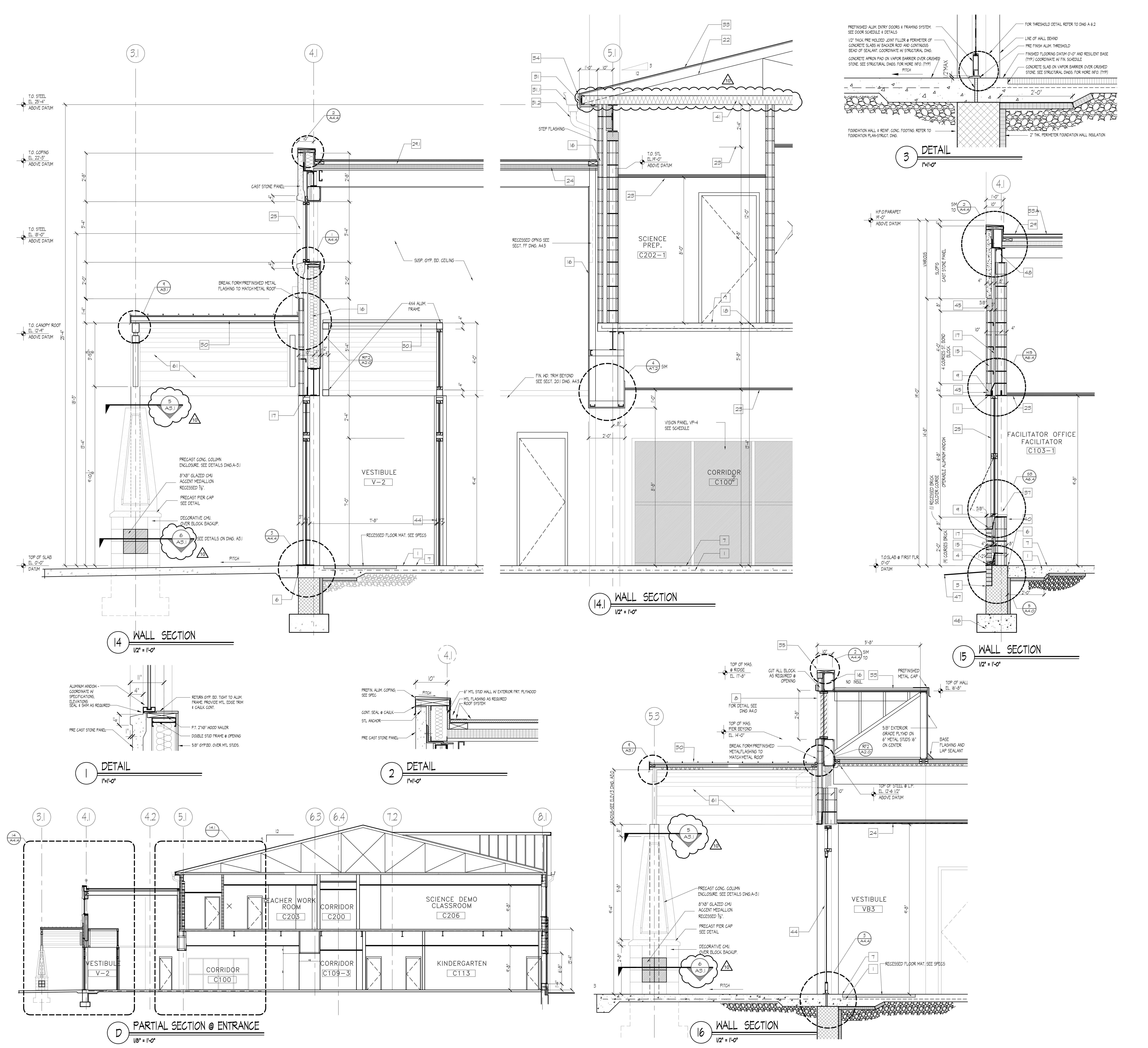

KEYED WALL SECTION NOTES:

1. CONCRETE SLAB ON VAPOR BARRIER OVER CRUSHED STONE. SEE STRUCTURAL DWGS. FOR MORE INFO. (TYP)
2. 2" THK. PERIMETER FOUNDATION WALL INSULATION
3. LINE OF BRICK SHELF @ FOUNDATION WALL TO REMAIN 8" MIN. BELOW GRADE COORDINATE GRADE W/ SITE / CIVIL PLANS AND VERIFY ACTUAL CONDITIONS IN FIELD (TYP.)
4. LINE OF THROUGH WALL FLASHING w/ TUBULAR WEEPS @ 24" oc TO REMAIN ABOVE GRADE. COORDINATE W/ SITE/CIVIL PLANS AND VERIFY ACTUAL CONDITIONS IN FIELD (TYP.)
5. PROVIDE "PEA" GRAVEL IN CAVITY MIN. 8" ABOVE THROUGH WALL FLASHING (TYP.)
6. 1/2" THICK PRE MOLDED JOINT FILLER @ PERIMETER OF CONCRETE SLABS W/ BACKER ROD AND CONTINUOUS BEAD OF SEALANT. COORDINATE W/ STRUCTURAL DWG.
7. FINISHED FLOORING AND RESILIENT BASE (TYP.) COORDINATE W/ FIN. SCHEDULE
8. PRE FINISHED ALUMINUM ARCHITECTURAL LOUVER. COORDINATE WITH MECHANICAL DRAWINGS .
9. THROUGH WALL FLASHING W/ END DAMS ABOVE MASONRY OPENING W/ WEEPS @ 24" oc.
10. STEEL LINTELS, COORDINATE W/ STRUCT DWG.
11. GALVANIZED STEEL LINTELS, PAINTED @ EXTERIOR OPNINGS . SIZES SEE STRUCT DWG.
12. 8" C.M.U. WALL W/ HORIZONTAL GALVINIZED STEEL REINFORCING @ 16" O.C.
13. 6" C.M.U. WALL W/ HORIZONTAL GALVINIZED STEEL REINFORCING @ 16" O.C.
14. FIRE RATED 12" C.M.U. WALL W/ HORIZONTAL GALVINIZED STEEL REINFORCING @ 16" O.C.
15. TYPICAL EXTERIOR "BRICK/BLOCK"WALL SYSTEM: 4" BRICK FACE W/2" AIR SPACE W/ CAVITY WALL INSULATION BOARD 1 1/2" THK & 8" C.M.U. BACKUP OR 12" C.M.U. BACK U ,SEE PLAN. HORIZONTAL GALVANIZED WIRE REI FORCING @ 16" O.C. (TYP.) SEE STRUCT. DWG. FOR VERTICAL STEEL REINFORCEMENT WHERE REQUIRED.
16. 6" METAL STUD 16 GA. 16" O.C. & 5/8" EXTER. GRADE GYP BD SHEATHING R-19 FIBERGLASS BATT INSULATION
17. CAVITY WALL INSULATION CLIP/ BRICK TIES @ 16" O.C. VERTICALLY ANd HORIZONTALLY (TYP.)
18. CONC. SLAB W/ METAL DECK ON WF FRAMING SYSTEM. SEE STRUCT DWG
19. SPRAYED FIRE PROOFING FOR 1 HR. FIRE RATING REQUIREMENTS
20. STEEL WF BEAM / BAR JOIST/METAL DECK ROOF FRAMING SYSTEM REFER STRUCT. DWGS.
21. STEEL WF BEAM / STEEL TRUSS /METAL DECK ROOF FRAMING SYSTEM REFER STRUCT. DWGS.
22. PREENGIENEERED LIGHT GA.METAL STUD TRUSS SYSTEM & 9/16" GALV.METAL DECK BY USD INC. ROOF FRAMING SYSTEM REFER STRUCT. DWGS.
23. CEILING SYSTEM(TYP) REFER TO REFLECTED CEILING PLANS
24. SUSPENDED GYP. BD. CEILING, FASCIA & SOFFIT SYSTEMS (TYP.) REFER REFLECTED CEILING PLAN
25. ALUMINUM WINDOW - COORDINATE W/ SPECIFICATIONS, ELEVATIONS, WALL SECTIONS & FLOOR PLANS
26. GLAZED CURTAIN WALL SYSTEM
27. CONTINUOUS P.T. WOOD BLOCKING SECURED TO TOP OF MASONRY BY 3/8" X 8" ANCHOR BOLTS @ 2'-8" O.C. (TYP.)
28. ROOFING SYSTEM OVER 3" MIN. TAPERED INSULATION(TYP. OR OVER 3" UNIFORM INSULATION).
29. ASPHALT ROOF SHINGLES OVER 2 PLY FELT UNDERLAYMENT OVER VENTILATED NAILBASE OVER 3-INCH THICK RIGID INSULATION OVER 1/2" PROTECTION BOARD OVER METAL DECK. PROVIDE ICE AND WATERSHIELD AT EAVES, VALLEYS. HIPS, RIDGE AND PENETRATIONS. APPLY VAPOR BARRIER (PEEL & STICK ICE AND WATER SHIELD) OVER 1/2" PROTECTION BOARD
29.1 ASPHALT ROOF SHINGLES OVER 2 PLY FELT UNDERLAYMENT ON VENTILATED NAILBASE OVER 3" THICK RIGID INSULATION OVER 5/8" FIRE RETARDANT BASE SHEATHING. PROVIDE ICE AND WATERSHIELD AT EAVES, VALLEYS, HIPS, RIDGE, AND PENETRATIONS. APPLY VAPOR BARRIER (ICE & WATER SHIELD OVER 5/8" BASE SHEATHING
30. STANDING SEAM METAL ROOFING OVER 2 PLY FELT UNDERLAYMENT OVER 3/4" EXTERIOR GRADE PLYWOOD SUBSTRATE MECHANICALLY FASTENED TO METAL DECK. PROVIDE INTERGRAL FLAT PLATE AT TOP OF DECK FOR FASTENING. SCREWS TO LAND IN CLOSED CELL OF DECK SO AS NOT TO BE EXPOSED FROM UNDERSIDE OF CANOPY
30.1 STANDING SEAM METAL ROOF W/TRIMS @ PERIMETER OVER METAL DECK ON STEEL TRUSS SYSTEM. PRIMED AND PAINTED, SIMILAR TO EXTERIOR TRUSSSYSTEM @ VESTIBULE
31. PREFIN. METAL FASCIA/SOFFIT SYSTEM TO MATCH METAL ROOFING W/ 3/4" FURRING CHANNELS/ MT'L STUD FRAMING BRACE TO STRUCT. AND/ OR MASONRY.
31.1 PREFINISHED ALUM. GUTTER
31.2 PREFINISHED ALUM. DOWNSPOUT - SEE ELEVATIONS
31.3 CAST IRON DOWNSPOUT BOOT. J.R. SMITH MODEL No. 1786-24 OR APPROVED EQUAL. PRIME & FIN. PAINT. PROVIDE N-12 HIGH DENSITY POLYURETHANE PIPE (ADS). INCLUDE ALL FITTINGS, ADAPTERS, BENDS & HARDWARE NECESSARY TO COMPLETE DOWNSPOUT SYSTEM.
32. ICE/SNOW GUARD AT EAVES NEAR GUTTER @ SLOPING METAL ROOF. SPACING TO BE BY MFR'S STANDARD.
33. ASPHALT & COMPOSITE SHINGLES OVER 5/8" FIRE RETARDANT PLYWOOD SHEATHING AND 15LB ASPHALT FELT UNDERLAYMENT. FOR EAVES, VALLEYS & RIDGE FLASHING REQUIREMENTS REFER TO SPECS. & DETAILS ON DWGS. 2 SERIES. PROVIDE METAL DRIP EDGE AT EAVES.
33A STANDING METAL SEAM ROOF ASSEMBLY OVER 3" RIGID INSULATION (2LB/CU.FT.MIN. DENSITY) OVER 1/2" PROTECTION BOARD OVER METAL DECKING. APPLY VAPOR BARRIER (PEEL & STICK ICE AND WATER SHIELD) OVER 1/2" PROTECTION BOARD
34. CONTINUOUS ALUMINUM MANUFACTURED ROOF EDGE/ GRAVEL STOP SYSTEM (TYP.)
35. CONTINUOUS ALUMINUM MANUFACTURED COPING SYSTEM (TYP.)
36. KAL-WAL
37. 5/4" THICK WOOD (CLEAR POPLAR) WINDOW WILL; PRIME & PAINTED
38. PRE-FINISHED STANDING SEAM ROOF W/ METAL FASCIA/SOFFIT & ALUM. GUTTER & DOWN SPOUT OVER EXTR. GRADE PLYWOOD SHEATHING & 15 LB ASPHALT FELT UNDERLAYMENT SUPPORTED ON LIGHT GA. METAL STUD FRAMING SYSTEM.
39. FILL BLOCK VENEER AT WINDOWS W/ GRANULAR INSULATION (TYP)
40. FILL C.M.U. CORES SOLID CONTINUOUS AT ALL TRANSITIONS(TYP).
41. 6" (R-30) FIBERGLASS BATT INSULATION W/ RETAINER SECURED TO BOTTOM CHORD OF TRUSS (TYP.)
42. 1/2" GYP. BOARD PRIMED & PAINTED OVER METAL STUD FRAMING ON 16" O.C.
43. 5/8" REINF. GYP. BOARD PRIMED & PAINTED OVER METAL STUD FRAMING ON 16" O.C.
44. PREFINISHED ALUM. ENTRY DOORS & FRAMING SYSTEM. SEE DOOR SCHEDULE & DETAILS
45. RECESSED BRICK SOLDIER OR GFB VENEER ACCENT BAND. REFER TO ELEVATION
46. FOUNDATION WALL & REINF. CONC. FOOTING. REFER TO FOUNDATION PLAN-STRUCT. DWG.
47. APPROX. FIN. GRADE-REFER TO SITE GRADING PLAN
48. WF STEEL BEAM REFER TO STRUCT. DWGS.
49. 4" HIGH VINYL BASE
50. COLD APPLIED, SPRAYED-ON WATERPROOFING SYSTEM FULL HEIGHT ON FOUNDATION WALL-TIE INTO SLAB SYSTEM
51. 6"Φ PVC PERFORATED PERIMETER DRAIN W/ FILER FABRIC IN 12" GRAVEL SURROUND. COORD. W/ CIVIL
52. PRECAST 8" TERRAZZO BASE
53. PRECAST TERRAZZO TILE FLOORING
54. CERAMIC TILE FINISH OVER WATER RESISTANCE GYP. BD AT MTL STUD WALL.
55. 1/2" GYP. BD. @ UNDERSIDE OF TRUSS ABOVE CORRIDOR ONLY.
56. 1/2" GYP. BD. FULL HEIGHT @ CORRIDOR ONLY
57. SUSPENDED 1/2" GYP. BOARD PRIMED & PAINTED HUNG FROM STRUCTURE ABOVE
58. TYPICAL NOTE:WOOD FASCIA, BLOCKING, ROOF SHEATHING AND WOOD FILLERS SHALL BE FIRE RETARDANT TREATED WOOD
59. 1/2" BACKER ROD AND CHAULK CONTROL JOINT
60. PRE-APPLIED INTERGRALLY BONDED SHEET MEMBRANE WATERPROOFING SYSTEM - TIE INTO FOUNDATION WALL SYSTEM
61. EXPOSED STRUCTURAL STEEL MEMBERS AND METAL DECKING TO RECIEVE HIGH PERFORMANCE PAINT COATING PER SPECIFICATION SECTION 09960 (TYP. AT ALL EXTERIOR CANOPIES, ROOF OVERHANGS, BRACKETS AND STEEL PLATES)

KEY PLAN

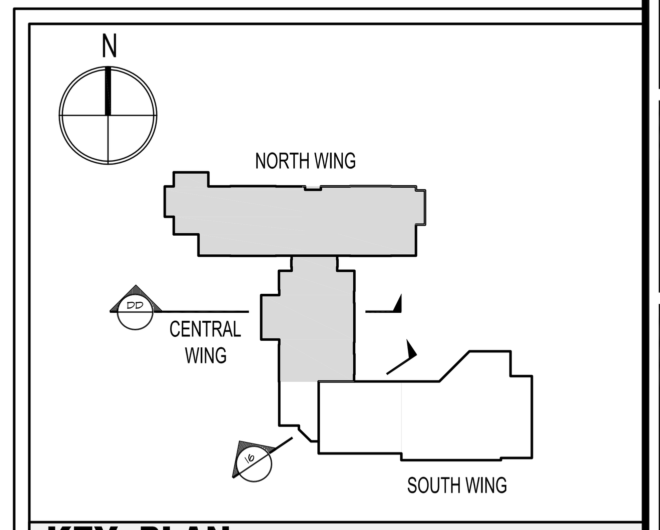

N.T.S.

SDA

NJ SCHOOLS DEVELOPMENT AUTHORITY

STATE OF NEW JERSEY

ECONOMIC DEVELOPMENT AUTHORITY

Design Ideas Group
architecture + planning, llc

15 Bethany Street
New Brunswick, NJ 08901
T: 732.249.6242
F: 732.247.1825

60 West Broad Street
Bethlehem, PA 18018
T: 610.807.0420
F: 610.807.0602

Richard D. Alderiso, AIA
NJ RA AI 15023 NY RA 027416

Robert M. Iamello, AIA
NJ RA 08585 NY RA 018723 DE RA S5-0006594 NH RA 2813

Vincent A. Myers, AIA
NJ RA AI 11415

Joseph P. Tomaino, AIA PP
NJ RA C6086 NJ PP 2442 PA RA B6732 CT RA 9650
DC RA ARC100054 DE RA S5-0006679 MD RA 8887
VA RA 0401011785 VT RA 03-0001370

Jeffrey D. Venezia, AIA
NJ RA AI 08271 NY RA 023719-1

Warren W. Winter, AIA
NJ RA AI 06853 NY RA 010562-1

CONSTRUCTION PROGRAM FOR THE
MARSHALL STREET ELEMENTARY SCHOOL
DOE# 4010-N01-02-0169
NJSDA# PA-0006-C03
DCA# OLCEHPC-05--013 ERU# 6095-05

ADDRESS
NJ SDA
WEST STATE STREET
TRENTON, NEW JERSEY

JOB NO. 23110

ISSUED
05/15/09 ISSUED FOR BID
07/06/09 ISSUED FOR BID
1 08/06/09 DCA REVIEW COMMENTS
2 05/05/10 DCA REVIEW COMMENTS
9 12/17/12 SDA AMENDMENTS 11 & 12
10 03/25/13 ADDENDUM NO. 2

DRAWING TITLE
BUILDING AND WALL SECTIONS

DRAWING No.
A-4.4

DWG. NO. OF

Drawing name: P:\2012\2012-213.00 Marshall St Elementary - Restart\DRAWINGS\Condocs\A4_WALL SECTIONS\213-A4.4.dwg Plotted By : MFERRAGAMO Mar 25, 2013 - 6:05pm

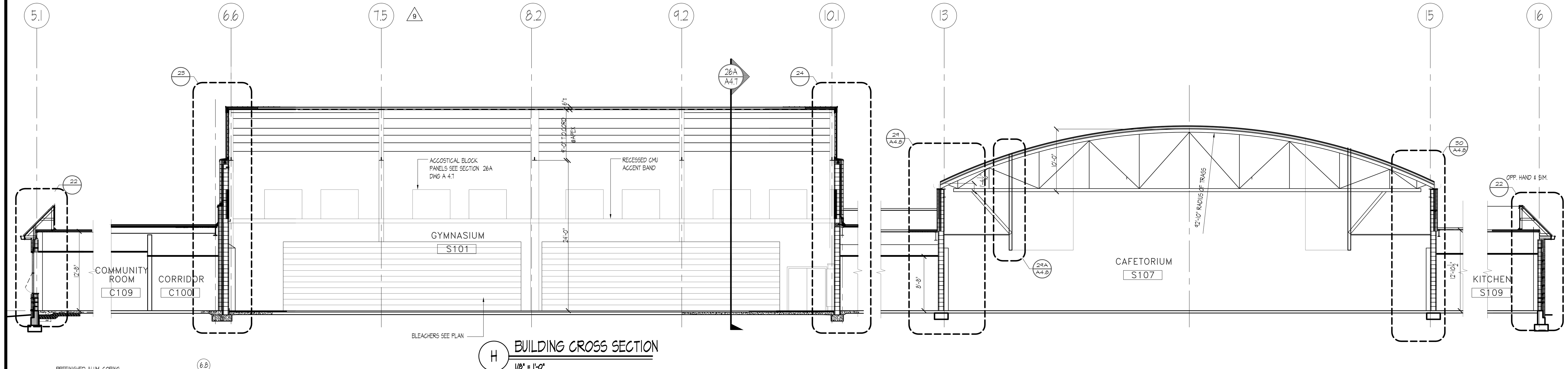

H BUILDING CROSS SECTION
1/8" = 1'-0"

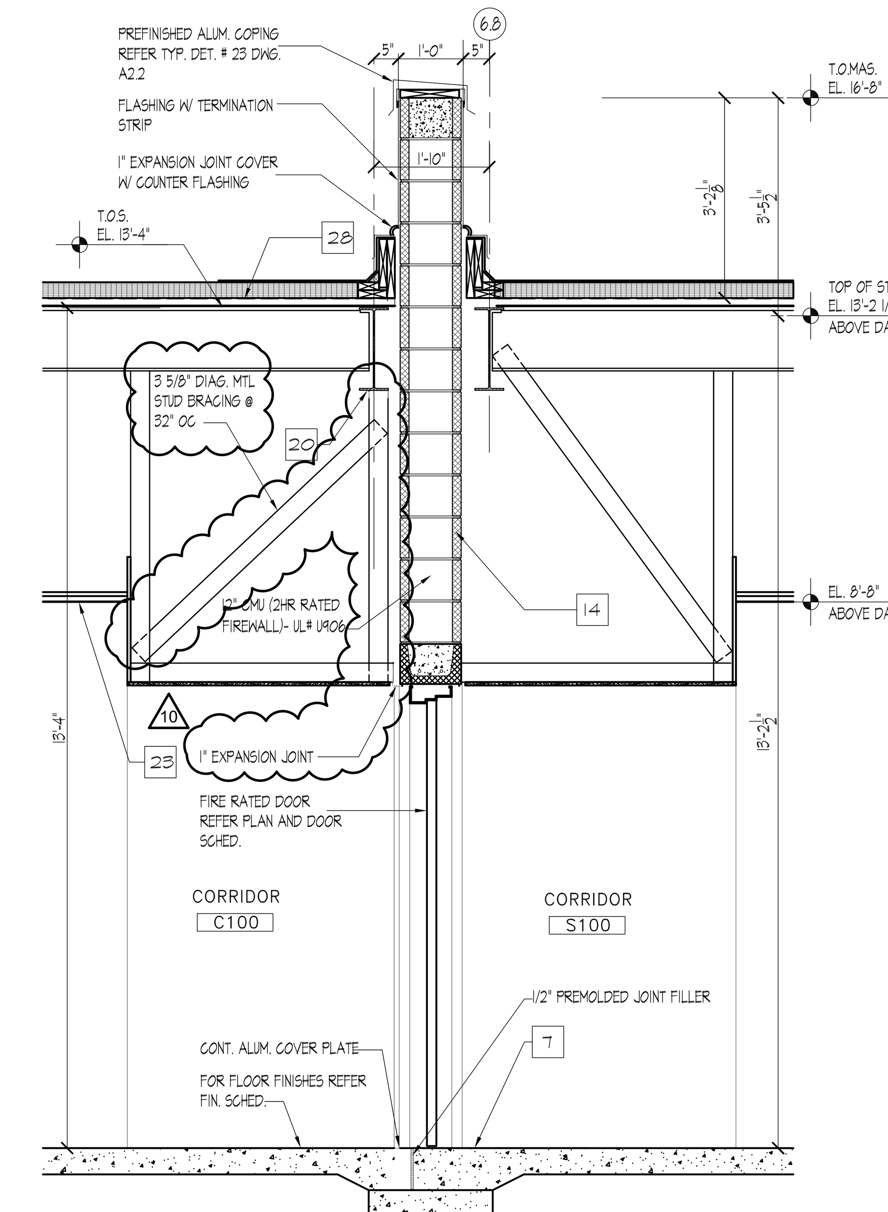

25 WALL SECTION
1/2" = 1'-0"

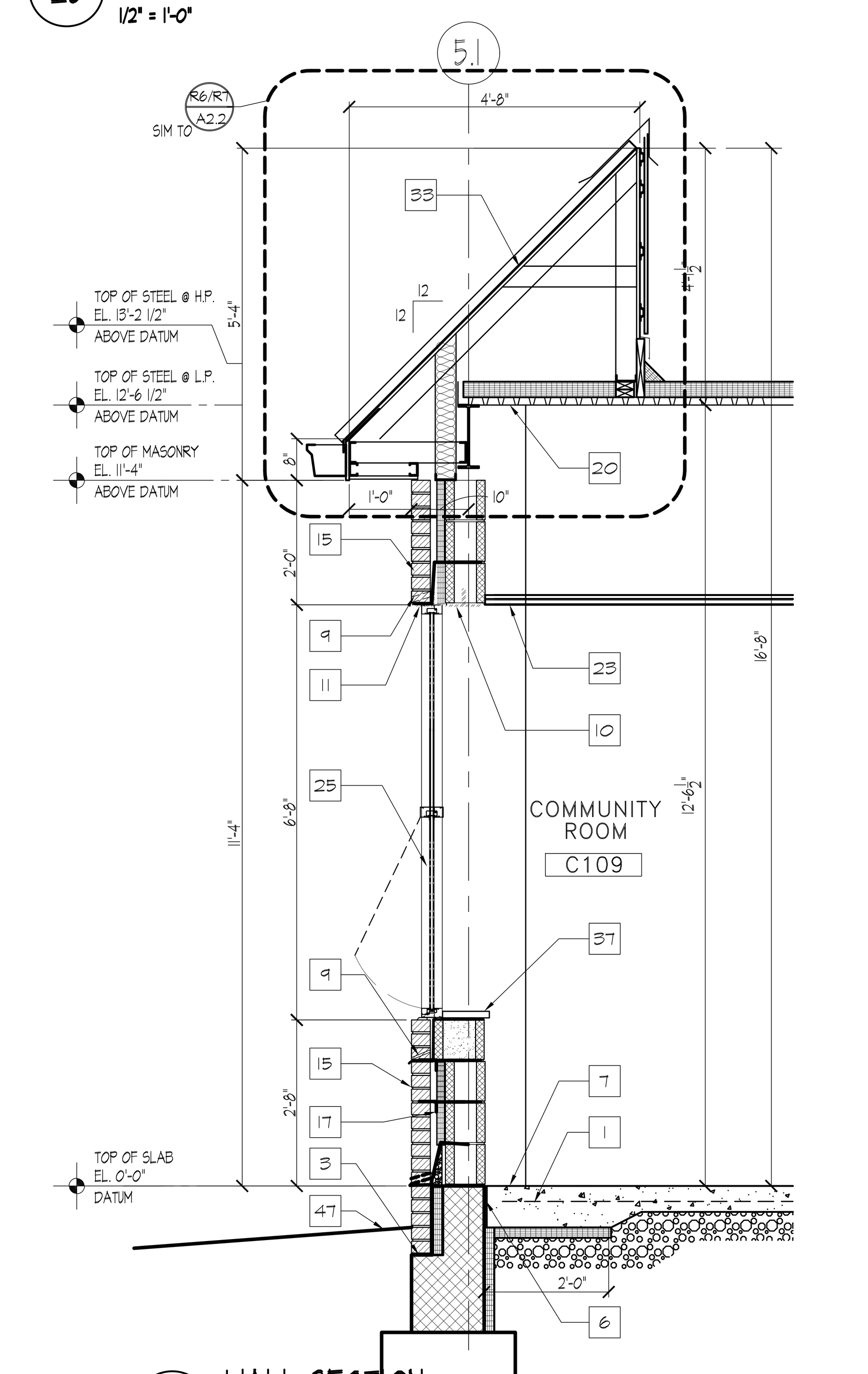

22 WALL SECTION
1/2" = 1'-0"

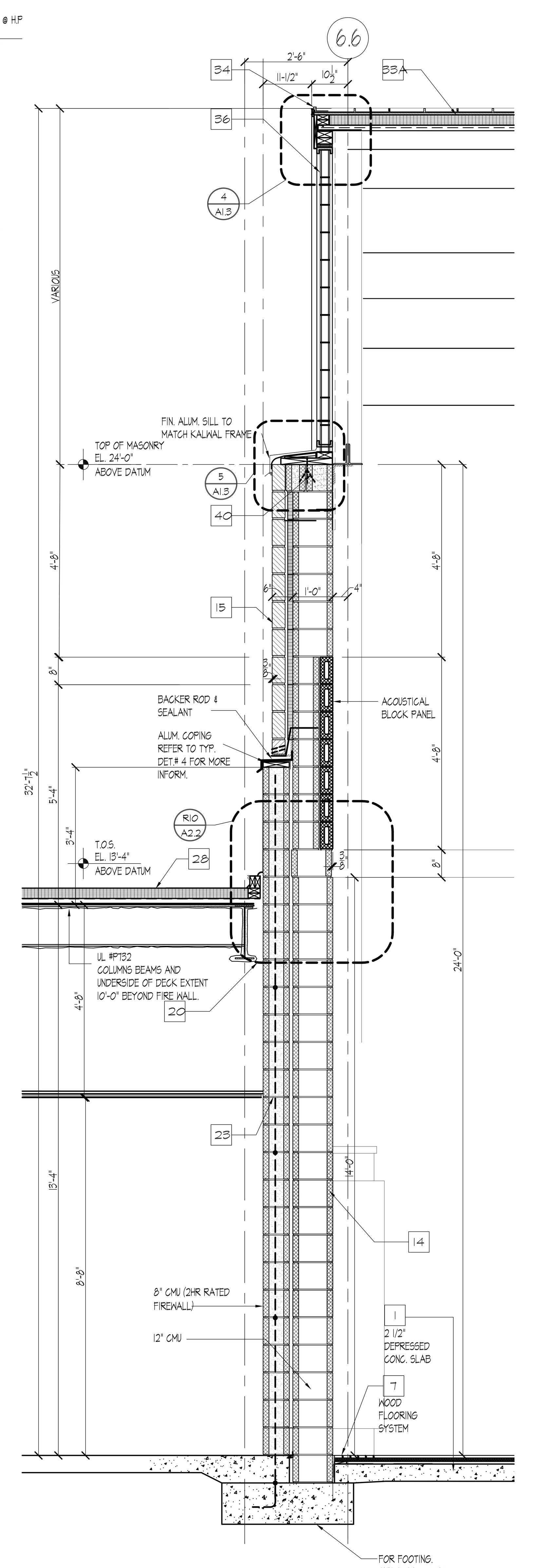

23 WALL SECTION
1/2" = 1'-0"

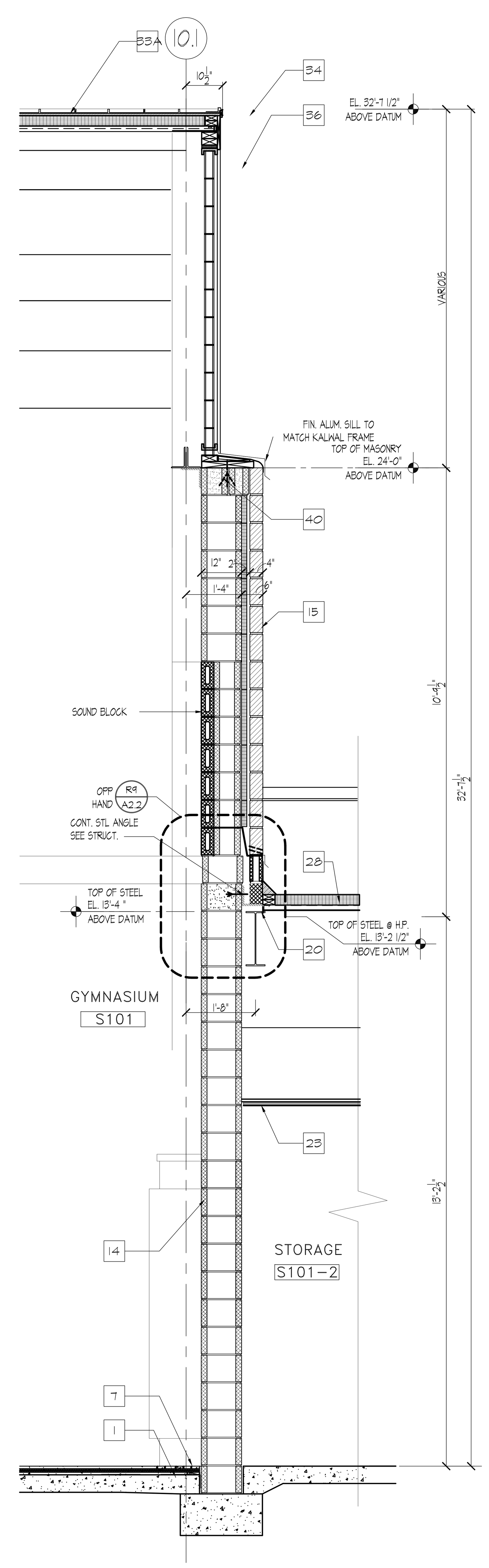

24 WALL SECTION
1/2" = 1'-0"

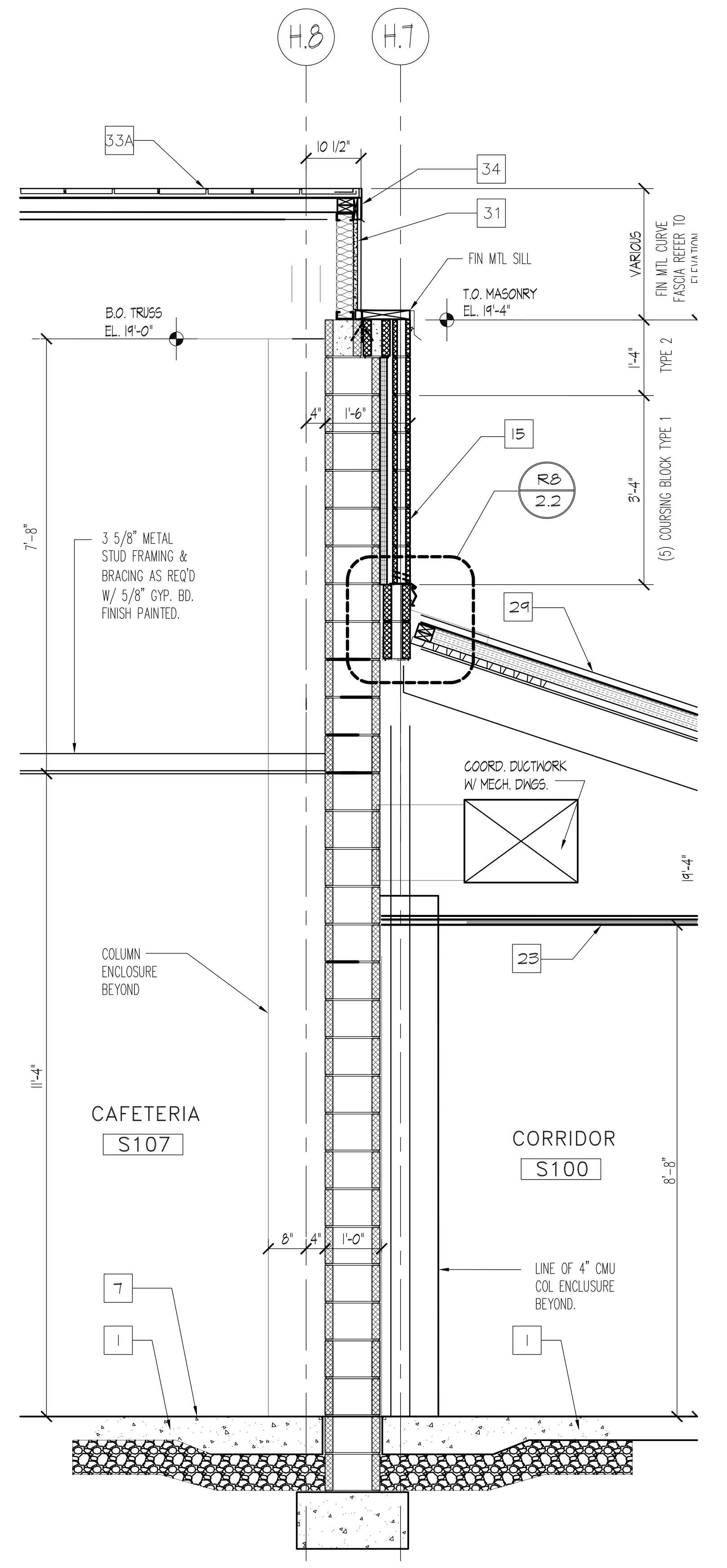

26 WALL SECTION
1/2" = 1'-0"

KEYED WALL SECTION NOTES:

1 CONCRETE SLAB ON VAPOR BARRIER OVER CRUSHED STONE. SEE STRUCTURAL DWGS. FOR MORE INFO. (TYP)
2 2" THK. PERIMETER FOUNDATION WALL INSULATION
3 LINE OF BRICK SHELF @ FOUNDATION WALL TO REMAIN 8" MIN. BELOW GRADE COORDINATE GRADE W/ SITE / CIVIL PLANS AND VERIFY ACTUAL CONDITIONS IN FIELD (TYP.)
4 LINE OF THROUGH WALL FLASHING W/ TUBULAR WEEPS @ 24" oc TO REMAIN ABOVE GRADE. COORDINATE W/ SITE/CIVIL PLANS AND VERIFY ACTUAL CONDITIONS IN FIELD (TYP.)
5 PROVIDE "PEA" GRAVEL IN CAVITY MIN. 8" ABOVE THROUGH WALL FLASHING (TYP.)
6 1/2" THICK PRE MOLDED JOINT FILLER @ PERIMETER OF CONCRETE SLABS W/ BACKER ROD AND CONTINUOUS BEAD OF SEALANT. COORDINATE W/ STRUCTURAL DWG.
7 FINISHED FLOORING AND RESILIENT BASE (TYP.) COORDINATE W/ FIN. SCHEDULE
8 PRE FINISHED ALUMINUM ARCHITECTURAL LOUVER. COORDINATE WITH MECHANICAL DRAWINGS.
9 THROUGH WALL FLASHING W/ END DAMS ABOVE MASONRY OPENING W/ WEEPS @ 24" oc.
10 STEEL LINTELS, COORDINATE W/ STRUCT DWG.
11 GALVANIZED STEEL LINTELS, PAINTED @ EXTERIOR OPENINGS . SIZES SEE STRUCT DWG.
12 8" C.M.U. WALL W/ HORIZONTAL GALVINIZED STEEL REINFORCING @ 16" O.C.
13 6" C.M.U. WALL W/ HORIZONTAL GALVINIZED STEEL REINFORCING @ 16" O.C.
14 FIRE RATED 12" C.M.U. WALL W/ HORIZONTAL GALVINIZED STEEL REINFORCING @ 16" O.C.
15 TYPICAL EXTERIOR "BRICK/BLOCK"WALL SYSTEM: 4" BRICK FACE W/2" AIR SPACE W/ CAVITY WALL INSULATION BOARD 1 1/2" THK & 8" C.M.U. BACKUP OR 12" C.M.U. BACK U SEE PLAN. HORIZONTAL GALVANIZED WIRE REI FORCING @ 16" O.C. (TYP.) SEE STRUCT. DWG. FOR VERTICAL STEEL REINFORCEMENT WHERE REQUIRED.
16 6" METAL STUD 16 GA. 16" O.C. & 5/8" EXTER. GRADE GYP BD SHEATHING R-19 FIBERGLASS BATT INSULATION
17 CAVITY WALL INSULATION CLIP/ BRICK TIES @ 16" O.C. VERTICALLY ANd HORIZONTALLY (TYP.)
18 CONC. SLAB W/ METAL DECK ON WF FRAMING SYSTEM. SEE STRUCT DWG
19 SPRAYED FIRE PROOFING FOR 1 HR. FIRE RATING REQUIREMENTS
20 STEEL WF BEAM / BAR JOIST/METAL DECK ROOF FRAMING SYSTEM REFER STRUCT. DWGS.
21 STEEL WF BEAM / STEEL TRUSS /METAL DECK ROOF FRAMING SYSTEM REFER STRUCT. DWGS.
22 PREENGINEERED LIGHT GA.METAL STUD TRUSS SYSTEM & 9/16" GALV.METAL DECK BY USD INC. ROOF FRAMING SYSTEM REFER STRUCT. DWGS.
23 CEILING SYSTEM (TYP) REFER TO REFLECTED CEILING PLANS
24 SUSPENDED GYP. BD. CEILING, FASCIA & SOFFIT SYSTEMS (TYP.) REFER REFLECTED CEILING PLAN
25 ALUMINUM WINDOW - COORDINATE W/ SPECIFICATIONS, ELEVATIONS, WALL SECTIONS & FLOOR PLANS
26 GLAZED CURTAIN WALL SYSTEM
27 CONTINUOUS P.T. WOOD BLOCKING SECURED TO TOP OF MASONRY BY 3/8" X 8" ANCHOR BOLTS @ 2'-8" O.C. (TYP.)
28 ROOFING SYSTEM OVER 3" MIN. TAPERED INSULATION TYP. OR OVER 3" UNIFORM INSULATION.
29 ASPHALT ROOF SHINGLES OVER 2 PLY FELT UNDERLAYMENT OVER VENTILATED NAILBASE OVER 3-INCH THICK RIGID INSULATION OVER 1/2" PROTECTION BOARD OVER METAL DECK. PROVIDE ICE AND WATERSHIELD AT EAVES, VALLEYS, HIPS, RIDGE AND PENETRATIONS. APPLY VAPOR BARRIER (PEEL & STICK ICE AND WATER SHIELD) OVER 1/2" PROTECTION BOARD
29.1 ASPHALT ROOF SHINGLES OVER 2 PLY FELT UNDERLAYMENT ON VENTILATED NAILBASE OVER 3" THICK RIGID INSULATION OVER 5/8" FIRE RETARDANT BASE SHEATHING. PROVIDE ICE AND WATERSHIELD AT EAVES, VALLEYS, HIPS, RIDGE, AND PENETRATIONS. APPLY VAPOR BARRIER (ICE & WATER SHIELD OVER 5/8" BASE SHEATHING
30 STANDING SEAM METAL ROOFING OVER 2 PLY FELT UNDERLAYMENT OVER 3/4" EXTERIOR GRADE PLYWOOD SUBSTRATE MECHANICALLY FASTENED TO METAL DECK. PROVIDE INTERGRAL FLAT PLATE AT TOP OF DECK FOR FASTENING. SCREWS TO LAND IN CLOSED CELL OF DECK SO AS NOT TO BE EXPOSED FROM UNDERSIDE OF CANOPY
30.1 STANDING SEAM METAL ROOF W/TRIMS @ PERIMETER OVER METAL DECK ON STEEL TRUSS SYSTEM. PRIMED AND PAINTED, SIMILAR TO EXTERIOR TRUSSSYSTEM @ VESTIBULE
31 PREFIN. METAL FASCIA/SOFFIT SYSTEM TO MATCH METAL ROOFING W/ 3/4" FURRING CHANNELS/ MTL STUD FRAMING BRACE TO STRUCT. AND/ OR MASONRY.
31.1 PREFINISHED ALUM. GUTTER
31.2 PREFINISHED ALUM. DOWNSPOUT - SEE ELEVATIONS
31.3 CAST IRON DOWNSPOUT BOOT. J.R. SMITH MODEL No. 1786-24 OR APPROVED EQUAL. PRIME & FIN. PAINT. PROVIDE N-12 HIGH DENSITY POLYURETHANE PIPE (ADS). INCLUDE ALL FITTINGS, ADAPTERS, BENDS & HARDWARE NECESSARY TO COMPLETE DOWNSPOUT SYSTEM.
32 ICE/SNOW GUARD AT EAVES NEAR GUTTER @ SLOPING METAL ROOF. SPACING TO BE BY MFR'S STANDARD.
33 ASPHALT & COMPOSITE SHINGLES OVER 5/8" FIRE RETARDANT PLYWOOD SHEATHING AND 15LB ASPHALT FELT UNDERLAYMENT. FOR EAVES, VALLEYS & RIDGE FLASHING REQUIREMENTS REFER TO SPECS. & DETAILS ON DWGS. 2 SERIES. PROVIDE METAL DRIP EDGE AT EAVES
33A STANDING METAL SEAM ROOF ASSEMBLY OVER 3" RIGID INSULATION (2LB/CUFT.MIN. DENSITY) OVER 1/2" PROTECTION BOARD OVER METAL DECKING. APPLY VAPOR BARRIER (PEEL & STICK ICE AND WATER SHIELD) OVER 1/2" PROTECTION BOARD
34 CONTINUOUS ALUMINUM MANUFACTURED ROOF EDGE/ GRAVEL STOP SYSTEM (TYP.)
35 CONTINUOUS ALUMINUM MANUFACTURED COPING SYSTEM (TYP.)
36 KAL-WAL
37 5/4" THICK WOOD (CLEAR POPLAR) WINDOW MILL; PRIME & PAINTED
38 PRE-FINISHED STANDING SEAM ROOF W/ METAL FASCIA/SOFFIT & ALUM. GUTTER & DOWN SPOUT OVER EXTR. GRADE PLYWOOD SHEATHING & 15 LB ASPHALT FELT UNDERLAYMENT SUPPORTED ON LIGHT GA. METAL STUD FRAMING SYSTEM.
39 FILL BLOCK VENEER AT WINDOWS W/ GRANULAR INSULATION (TYP)
40 FILL C.M.U. CORES SOLID CONTINUOUS AT ALL TRANSITIONS(TYP).
41 6" (R-30) FIBERGLASS BATT INSULATION W/ RETAINER SECURED TO BOTTOM CHORD OF TRUSS (TYP.)
42 1/2" GYP. BOARD PRIMED & PAINTED OVER METAL STUD FRAMING ON 16" O.C.
43 5/8" REINF. GYP. BOARD PRIMED & PAINTED OVER METAL STUD FRAMING ON 16" O.C.
44 PREFINISHED ALUM. ENTRY DOORS & FRAMING SYSTEM. SEE DOOR SCHEDULE & DETAILS
45 RECESSED BRICK SOLDIER OR GFB VENEER ACCENT BAND. REFER TO ELEVATION
46 FOUNDATION WALL & REINF. CONC. FOOTING. REFER TO FOUNDATION PLAN-STRUCT. DWG.
47 APPROX. FIN. GRADE-REFER TO SITE GRADING PLAN
48 WF STEEL BEAM. REFER TO STRUCT. DWGS.
49 4" HIGH VINYL BASE
50 COLD APPLIED SPRAYED-ON WATERPROOFING SYSTEM FULL HEIGHT ON FOUNDATION WALL-TIE INTO SLAB SYSTEM
51 6"? PVC PERFORATED PERIMETER DRAIN W/ FILER FABRIC IN 12" GRAVEL SURROUND. COORD. W/ CIVIL
52 PRECAST 8" TERRAZZO BASE
53 PRECAST TERRAZZO TILE FLOORING
54 CERAMIC TILE FINISH OVER WATER RESISTANCE GYP. BD AT MTL STUD WALL.
55 1/2" GYP. BD. @ UNDERSIDE OF TRUSS ABOVE CORRIDOR ONLY.
56 1/2" GYP. BD. FULL HEIGHT @ CORRIDOR ONLY.
57 SUSPENDED 1/2" GYP. BOARD PRIMED & PAINTED HUNG FROM STRUCTURE ABOVE
58 TYPICAL NOTE:WOOD FASCIA, BLOCKING, ROOF SHEATHING AND WOOD FILLERS SHALL BE FIRE RETARDANT TREATED WOOD
59 1/2" BACKER ROD AND CHAULK CONTROL JOINT
60 PRE-APPLIED INTERGRALLY BONDED SHEET MEMBRANE WATERPROOFING SYSTEM - TIE INTO FOUNDATION WALL SYSTEM

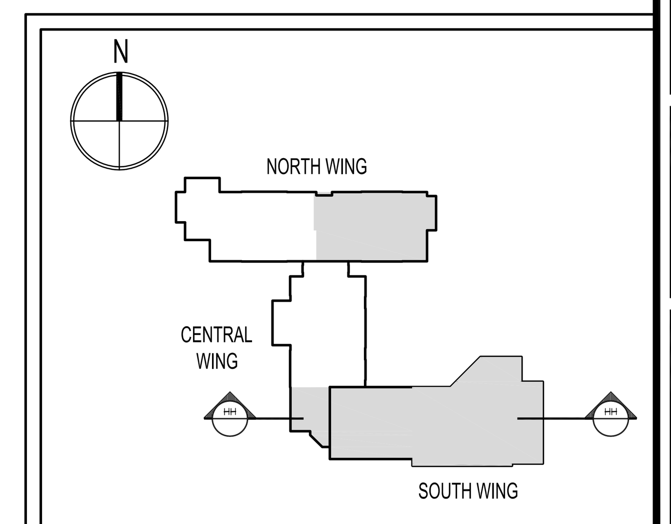

KEY PLAN N.T.S.

SDA
NJ SCHOOLS DEVELOPMENT AUTHORITY
STATE OF NEW JERSEY
ECONOMIC DEVELOPMENT AUTHORITY

DesignIdeasGroup
architecture + planning, llc
15 Bethany Street
New Brunswick, NJ 08901
T: 732.249.6242
F: 732.247.1825
142 West 36th Street
New York, NY 10018
T: 645.584.8419

Richard D. Alderiso, AIA
NJ RA AI 15023 NY RA 027416
Vincent A. Myers, AIA
NJ RA AI 11415
Jeffrey D. Venezia, AIA
NJ RA AI 08271 NY RA 023719-1
Warren W. Winter, AIA
NJ RA AI 06853 NY RA 010562-1

CONSTRUCTION PROGRAM FOR THE
MARSHALL STREET ELEMENTARY SCHOOL
DOE# 4010-N01-02-0169
NJSDA# PA-0006-C04
DCA# OLCEHPC-05--013 ERU# 6095-05
ADDRESS
NJSDA
1 WEST STATE STREET
TRENTON, NEW JERSEY

PROJECT NO.: 2012-213.00

ISSUED
05/15/09 ISSUED FOR BID
07/06/09 ISSUED FOR BID
1 08/06/09 DCA REVIEW COMMENTS
9 12/17/12 SDA AMENDMENTS 11 & 12
10 03/25/13 ADDENDUM NO. 2

DRAWING TITLE
BUILDING AND WALL SECTIONS

DRAWING No.
A-4.6
DWG. NO. OF

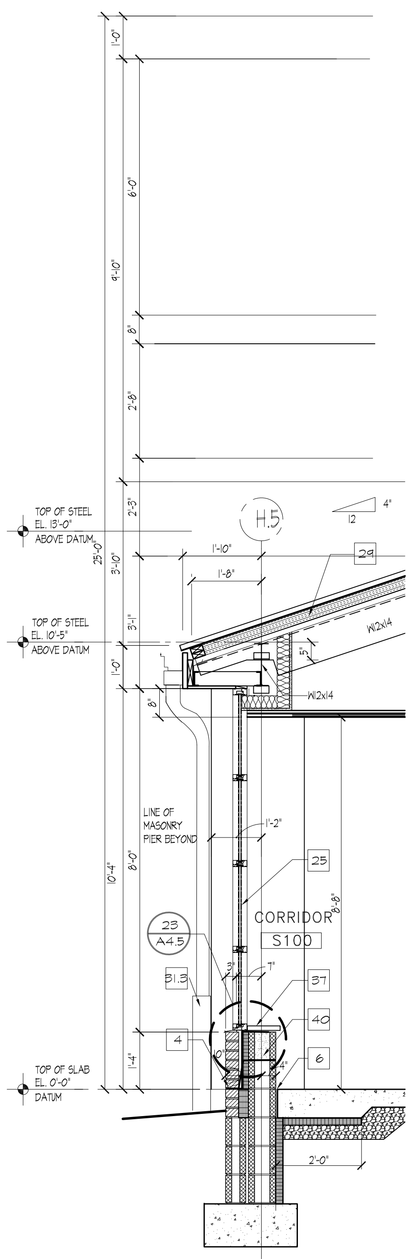

26 WALL SECTION
1/2" = 1'-0"

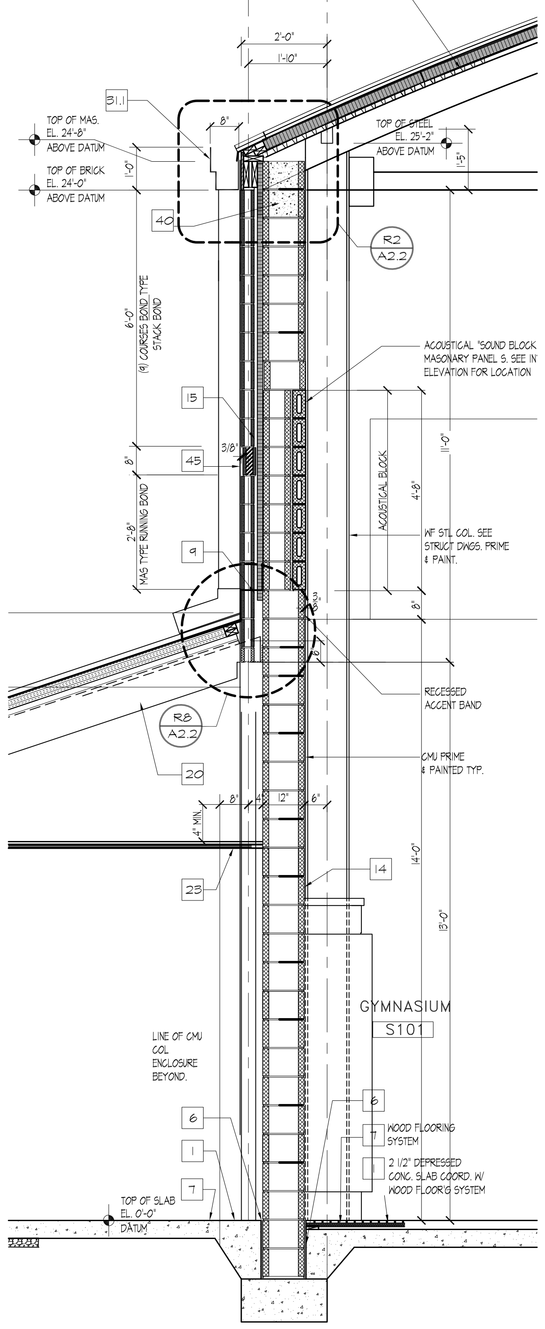

26A WALL SECTION
1/2" = 1'-0"

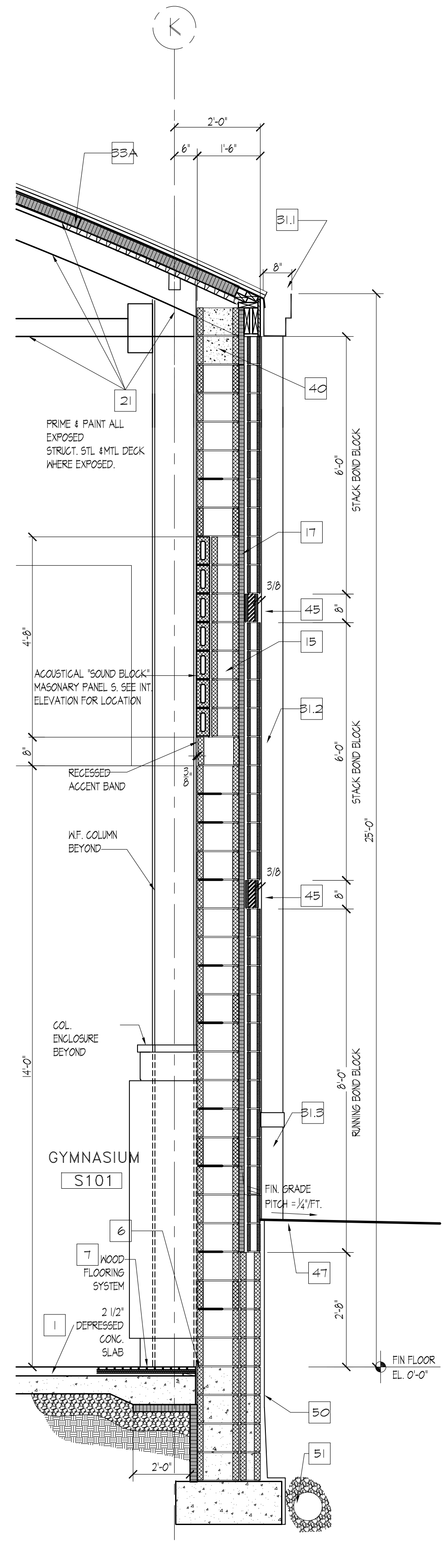

27 WALL SECTION
1/2" = 1'-0"

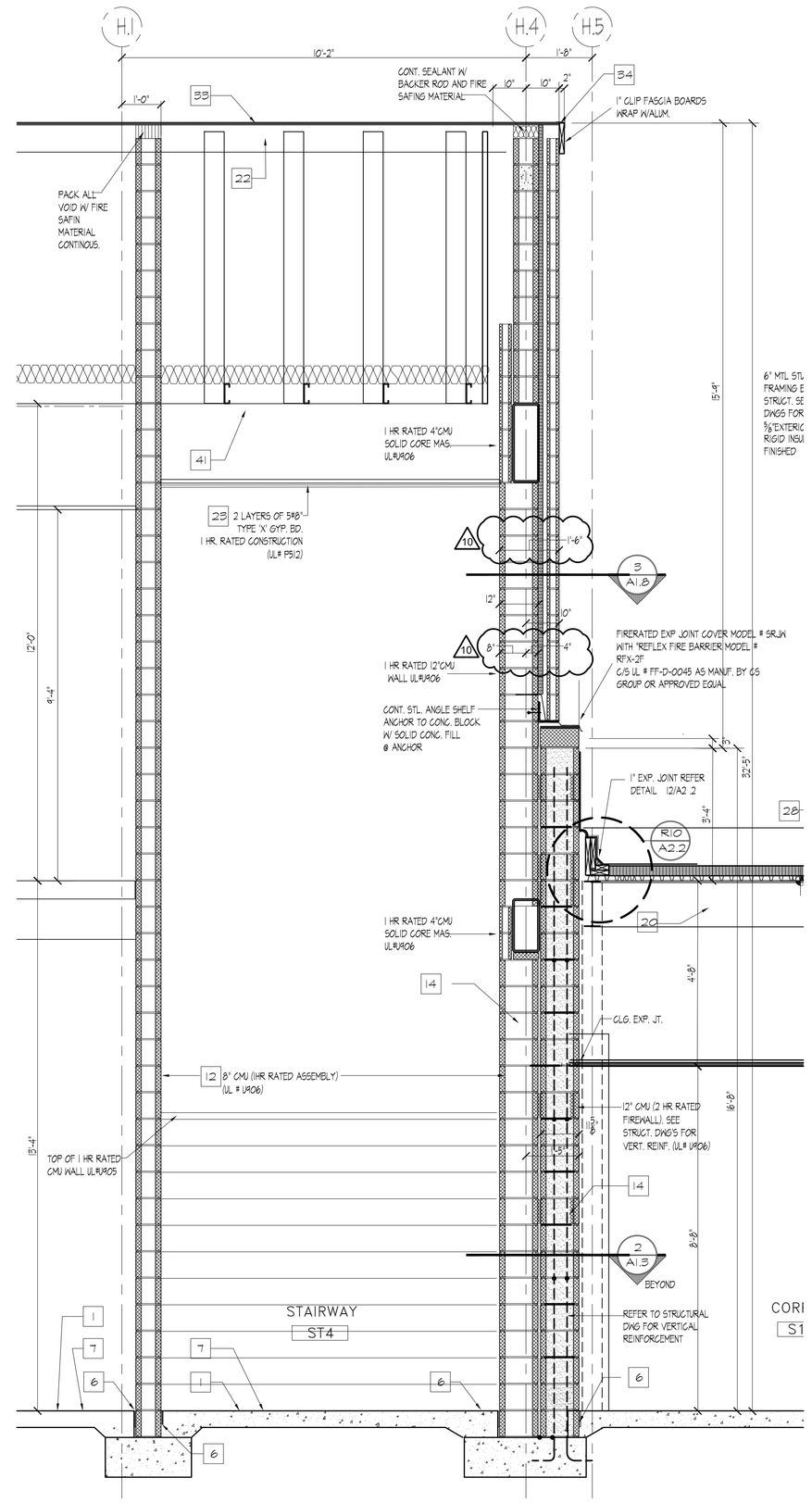

28 WALL SECTION
1/2" = 1'-0"

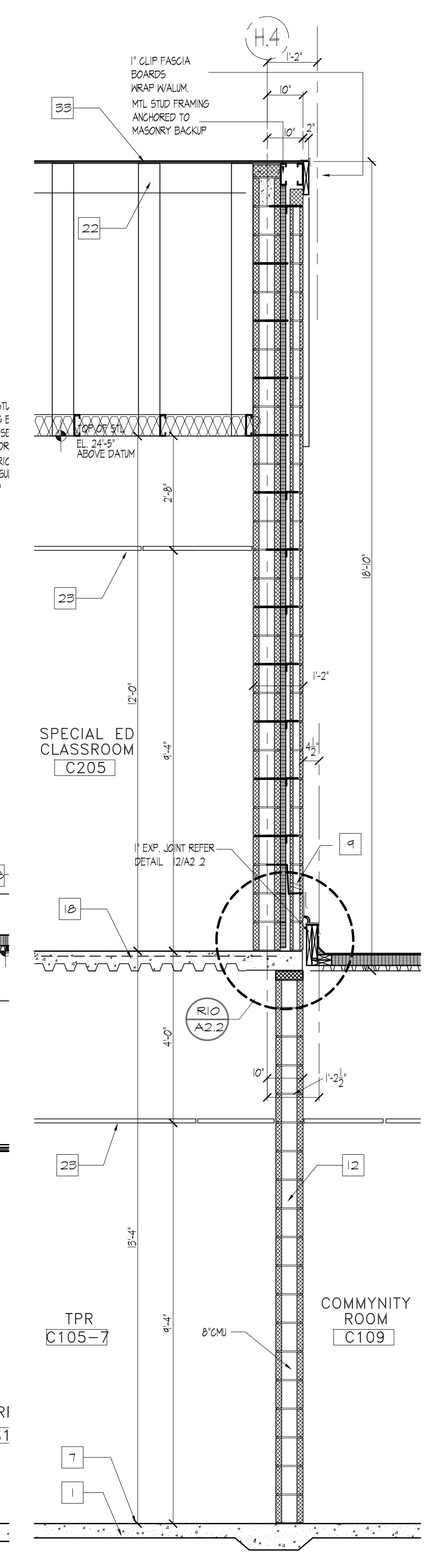

28A WALL SECTION
1/2" = 1'-0"

KEYED WALL SECTION NOTES:

1. CONCRETE SLAB ON VAPOR BARRIER OVER CRUSHED STONE. SEE STRUCTURAL DWGS. FOR MORE INFO. (TYP.)
2. 2" THK. PERIMETER FOUNDATION WALL INSULATION
3. LINE OF BRICK SHELF @ FOUNDATION WALL TO REMAIN 8" MIN. BELOW GRADE COORDINATE GRADE W/ SITE / CIVIL PLANS AND VERIFY ACTUAL CONDITIONS IN FIELD (TYP.)
4. LINE OF THROUGH WALL FLASHING W/ TUBULAR WEEPS @ 24" oc. TO REMAIN ABOVE GRADE. COORDINATE W/ SITE/CIVIL PLANS AND VERIFY ACTUAL CONDITIONS IN FIELD (TYP.)
5. PROVIDE "PEA" GRAVEL IN CAVITY MIN. 8" ABOVE THROUGH WALL FLASHING (TYP.)
6. 1/2" THICK PRE MOLDED JOINT FILLER @ PERIMETER OF CONCRETE SLABS W/ BACKER ROD AND CONTINUOUS BEAD OF SEALANT. COORDINATE W/ STRUCTURAL DWG.
7. FINISHED FLOORING AND RESILIENT BASE (TYP.) COORDINATE W/ FIN. SCHEDULE
8. PRE FINISHED ALUMINUM ARCHITECTURAL LOUVER. COORDINATE WITH MECHANICAL DRAWINGS.
9. THROUGH WALL FLASHING W/ END DAMS ABOVE MASONRY OPENING W/ WEEPS @ 24" oc.
10. STEEL LINTELS. COORDINATE W/ STRUCT DWG.
11. GALVANIZED STEEL LINTELS. PAINTED @ EXTERIOR OPNINGS. SIZES SEE STRUCT DWG.
12. 8" C.M.U. WALL W/ HORIZONTAL GALVINIZED STEEL REINFORCING @ 16" O.C.
13. 6" C.M.U. WALL W/ HORIZONTAL GALVINIZED STEEL REINFORCING @ 16" O.C.
14. FIRE RATED 12" C.M.U. WALL W/ HORIZONTAL GALVINIZED STEEL REINFORCING @ 16" O.C.
15. TYPICAL EXTERIOR "BRICK/BLOCK"WALL SYSTEM. 4" BRICK FACE W/2" AIR SPACE W/ CAVITY WALL INSULATION BOARD | 1/2" THK. & 8" C.M.U. BACKUP OR 12" C.M.U. BACK U SEE PLAN. HORIZONTAL GALVANIZED WIRE REI FORCING @ 16" O.C. (TYP.) SEE STRUCT. DWG. FOR VERTICAL STEEL REINFORCEMENT WHERE REQUIRED.
16. 6" METAL STUD 16 GA. @ 16" O.C. & 5/8" EXTER. GRADE GYP BD SHEATHING R+19 FIBERGLASS BATT INSULATION
17. CAVITY WALL INSULATION CLIP/ BRICK TIES @ 16" O.C. VERTICALLY AND HORIZONTALLY (TYP.)
18. CONC. SLAB W/ METAL DECK ON W7 FRAMING SYSTEM. SEE STRUCT DWG
19. SPRAYED FIRE PROOFING FOR 1 HR. FIRE RATING REQUIREMENTS
20. STEEL W7 BEAM / BAR JOIST/METAL DECK ROOF FRAMING SYSTEM REFER STRUCT. DWGS.
21. STEEL W7 BEAM / STEEL TRUSS/METAL DECK ROOF FRAMING SYSTEM REFER STRUCT. DWGS.
22. PREENGINEERED LIGHT GA/METAL STUD TRUSS SYSTEM & 4 1/8" GALV/METAL DECK BY USD INC. ROOF FRAMING SYSTEM REFER STRUCT. DWGS.
23. CEILING SYSTEM TYP/ REFER TO REFLECTED CEILING PLANS
24. SUSPENDED GYP. BD. CEILING, FASCIA & SOFFIT SYSTEMS (TYP.) REFER REFLECTED CEILING PLAN
25. ALUMINUM WINDOW - COORDINATE W/ SPECIFICATIONS, ELEVATIONS, WALL SECTIONS & FLOOR PLANS
26. GLAZED CURTAIN WALL SYSTEM
27. CONTINUOS P.T. WOOD BLOCKING SECURED TO TOP OF MASONRY BY 3/8" X 8" ANCHOR BOLTS @ 2'-0" O.C. (TYP.)
28. ROOFTNG SYSTEM OVER 3" MIN. TAPERED INSULATION/ TYP. OR OVER 3" UNIFORM INSULATION).
29. ASPHALT ROOF SHINGLES OVER 2 PLY FELT UNDERLAYMENT OVER VENTILATED WALBAKE OVER 3-INCH THICK RIGID INSULATION OVER 1/2" PROTECTION BOARD OVER METAL DECK. PROVIDE ICE AND WATERSHIELD AT EAVES, VALLEYS, HIPS, RIDGE AND PENETRATIONS. APPLY VAPOR BARRIER (PEEL & STICK ICE AND WATER SHIELD) OVER 1/2" PROTECTION BOARD
29A ASPHALT ROOF SHINGLES OVER 2 PLY FELT UNDERLAYMENT ON VENTLATED WALBASE OVER 5" THICK RIGID INSULATION OVER 5/8" FIRE RETARDANT BASE SHEATHING. PROVIDE ICE AND WATERSHIELD AT EAVES, VALLEYS, HIPS, RIDGE, AND PENETRATIONS. APPLY VAPOR BARRIER (ICE & WATER SHIELD OVER 5/8" BASE SHEATHING
30. STANDING SEAM METAL ROOFING OVER 2 PLY FELT UNDERLAYMENT OVER 3/4" EXTERIOR GRADE PLYWOOD SUBSTRATE MECHANICALLY FASTENED TO METAL DECK. PROVIDE INTEGRAL FLAT PLATE AT TOP OF DECK FOR FASTENING. SCREWS TO LAND IN CLOSED CELL OF DECK SO AS NOT TO BE EXPOSED FROM UNDERSIDE OF CANOPY
30A STANDING SEAM METAL ROOF W/TRIMS & PERIMETER OVER METAL DECK ON STEEL TRUSS SYSTEM. PRIMED AND PAINTED, SIMILAR TO EXTERIOR "RUSSSYSTEM & VESTIBULE
31. PREFIN. METAL FASCIA/SOFFIT SYSTEM TO MATCH METAL ROOFING W/ 3/4" FURRING CHANNELS/ MTL STUD FRAMING BRACE TO STRUCT. AND/ OR. MASONRY.
31.1 PREFINISHED ALUM. GUTTER
31.2 PREFINISHED ALUM. DOWNSPOUT - SEE ELEVATIONS
31.3 CAST IRON DOWNSPOUT BOOT. J.R. SMITH MODEL No. 1786-24 OR APPROVED EQUAL. PRIME & FIN. PAINT. PROVIDE N-12 HIGH DENSITY POLYURETHANE PIPE (ADS). INCLUDE ALL FITTINGS, ADAPTERS, BENDS & HARDWARE NECESSARY TO COMPLETE DOWNSPOUT SYSTEM.
32. ICE/SNOW GUARD AT EAVES NEAR GUTTER @ SLOPING METAL ROOF. SPACING TO BE BY MFR'S STANDARD.
33. ASPHALT & COMPOSITE SHINGLES OVER 5/8" FIRE RETARDANT PLYWOOD SHEATHING AND 6LB ASPHALT FELT UNDERLAYMENT. FOR EAVES, VALLEYS & RIDGE FLASHING REQUIREMENTS REFER TO SPECS. & DETAILS ON DWGS. 2 SERIES. PROVIDE METAL DRIP EDGE AT EAVES.
33A STANDING METAL SEAM ROOF ASSEMBLY OVER 5" RIGID INSULATION (2LB/CUFT.MIN. DENSITY) OVER 1/2" PROTECTION BOARD OVER METAL DECKING. APPLY VAPOR BARRIER (PEEL & STICK ICE AND WATER SHIELD) OVER 1/2" PROTECTION BOARD
34. CONTINOUS ALUMINUM MANUFACTURED ROOF EDGE/ GRAVEL STOP SYSTEM (TYP.)
35. CONTINOUS ALUMINUM MANUFACTURED COPING SYSTEM (TYP.)
36. KAL-WAL
37. 5/4" THICK WOOD (CLEAR POPLAR) WINDOW WILL. PRIME & PAINTED
38. PRE-FINISHED STANDING SEAM ROOF W/ METAL FASCIA/SOFFIT & ALUM. GUTTER & DOWN SPOUT OVER ENTR. GRADE PLYWOOD SHEATHING & 6 LB ASPHALT FELT UNDERLAYMENT SUPPORTED ON LIGHT GA. METAL STUD FRAMING SYSTEM.
39. FILL BLOCK VENEER AT WINDOWS W/ GRANULAR INSULATION (TYP)
40. FILL C.M.U. CORES SOLID CONTINOUS AT ALL TRANSITIONS(TYP).
41. 6" (R-30) FIBERGLASS BATT INSULATION W/ RETAINER SECURED TO BOTTOM CHORD OF TRUSS (TYP.)
42. 1/2" GYP. BOARD PRIMED & PAINTED OVER METAL STUD FRAMING ON 16" O.C.
43. 5/8" REINF. GYP. BOARD PRIMED & PAINTED OVER METAL STUD FRAMING ON 16" O.C.
44. PREFINISHED ALUM. ENTRY DOORS & FRAMING SYSTEM. SEE DOOR SCHEDULE & DETAILS
45. RECESSED BRICK SOLDIER OR GFB VENEER ACCENT BAND. REFER TO ELEVATION
46. FOUNDATION WALL & REINF. CONC. FOOTING. REFER TO FOUNDATION PLAN-STRUCT. DWG.
47. APPROX. FIN. GRADE-REFER TO SITE GRADING PLAN
48. W7 STEEL BEAM REFER TO STRUCT. DWGS.
49. 4" HIGH VINYL BASE
50. COLD APPLIED, SPRAYED-ON WATERPROOFING SYSTEM FULL HEIGHT ON FOUNDATION WALL-TIE INTO SLAB SYSTEM
51. 6"Ø PVC PERFORATED PERIMETER DRAIN W/ FILER FABRIC IN 12" GRAVEL SURROUND. COORD. W/ CIVIL
52. PRECAST 8" TERRAZZO BASE
53. PRECAST TERRAZZO TILE FLOORING
54. CERAMIC TILE FINISH OVER WATER RESISTANCE GYP. BD AT MTL STUD WALL.
55. 1/2" GYP. BD. @ UNDERSIDE OF TRUSS ABOVE CORRIDOR ONLY.
56. 1/2" GYP. BD. FULL HEIGHT @ CORRIDOR ONLY
57. SUSPENDED 1/2" GYP. BOARD PRIMED & PAINTED HUNG FROM STRUCTURE ABOVE
58. TYPICAL NOTE:WOOD FASCIA, BLOCKING, ROOF SHEATHING AND WOOD FILLERS SHALL BE FIRE RETARDANT TREATED WOOD
59. 1/4" BACKER ROD AND CHALK CONTROL JOINT
60. PRE-APPLIED INTEGRALLY BONDED SHEET MEMBRANE WATERPROOFING SYSTEM - TIE INTO FOUNDATION WALL SYSTEM

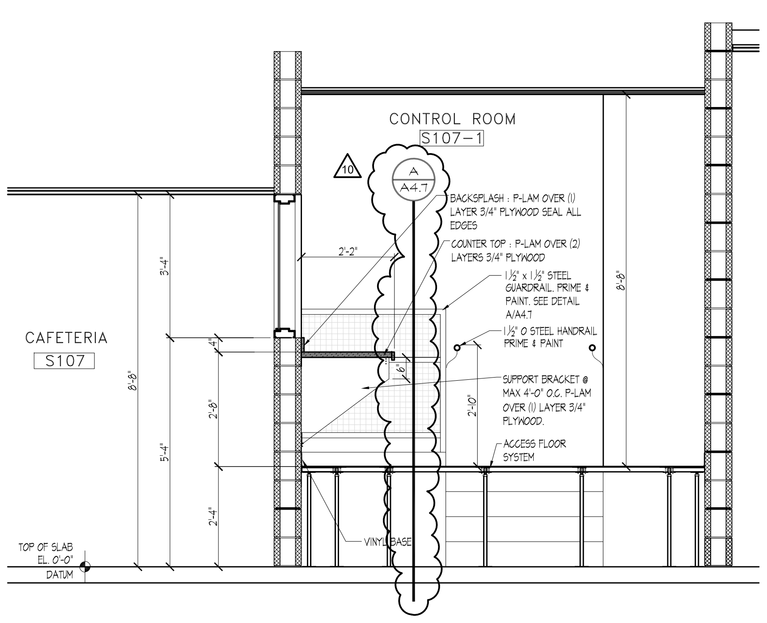

48 WALL SECTION
1/2" = 1'-0"

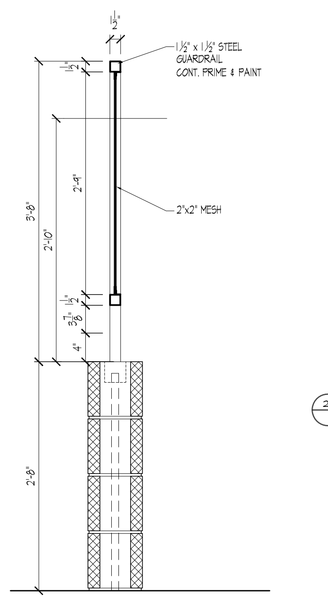

A DETAIL
1" = 1'-0"

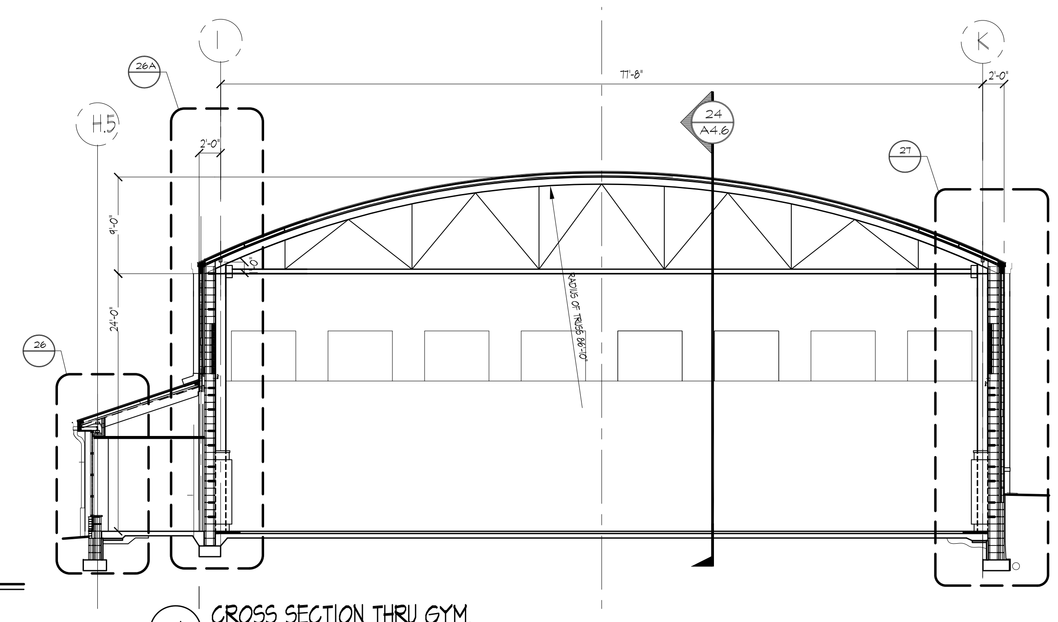

J CROSS SECTION THRU GYM.
1/8" = 1'-0"

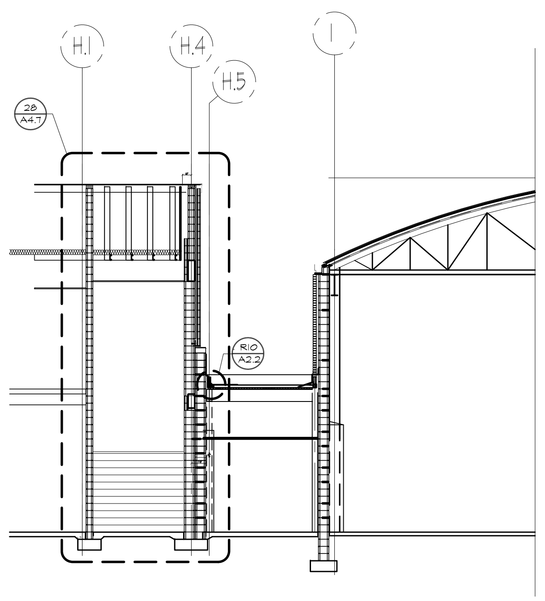

K CROSS SECTION THRU GYM.
1/8" = 1'-0"

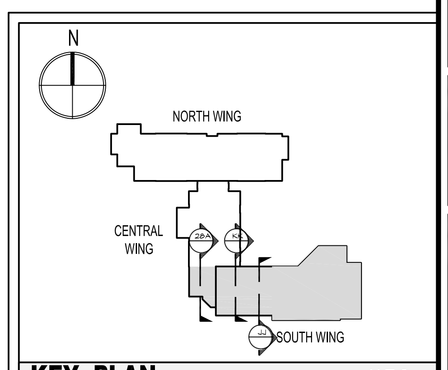

KEY PLAN N.T.S.

SDA

NJ SCHOOLS DEVELOPMENT AUTHORITY

STATE OF NEW JERSEY

ECONOMIC DEVELOPMENT AUTHORITY

DesignIdeasGroup
architecture + planning, llc

15 Bethany Street
New Brunswick, NJ 08901
T: 732.249.6242
F: 732.247.1825

60 West Broad Street
Bethlehem, PA 18018
T: 610.807.0420
F: 610.807.0602

Richard D. Alderiso, AIA
NJ RA AI 15023 NY RA 027416

Robert M. Iamello, AIA
NJ RA 08585 NY RA 018723 DE RA S5-0006594 NH RA 2813

Vincent A. Myers, AIA
NJ RA AI 11415

Joseph P. Tomaino, AIA PP
NJ RA C6086 NJ PP 2442 PA RA B6732 CT RA 9650
DC RA ARC100054 DE RA S5-0000679 MD RA 8887
VA RA 0401011785 VT RA 03-0001370

Jeffrey D. Venezia, AIA
NJ RA AI 08271 NY RA 023719-1

Warren W. Winter, AIA
NJ RA AI 06853 NY RA 010562-1

CONSTRUCTION PROGRAM FOR THE
MARSHALL STREET ELEMENTARY SCHOOL
DOE# 4010-N01-02-0169
NISDA# PA-0006-C03
DCA# OLCEHPC-05-013 ERU# 6095-05
ADDRESS
NJ SDA
WEST STATE STREET
TRENTON, NEW JERSEY

JOB NO. 23110
ISSUED
05/15/09 ISSUED FOR BID
07/06/09 ISSUED FOR BID
1 08/06/09 DCA REVIEW COMMENTS
9 12/17/12 SDA AMENDMENTS 11 & 12
10 03/25/13 ADDENDUM NO. 2

DRAWING TITLE
BUILDING AND WALL SECTIONS
GYMNASIUM

DRAWING No.
A-4.7

DWG. NO. OF

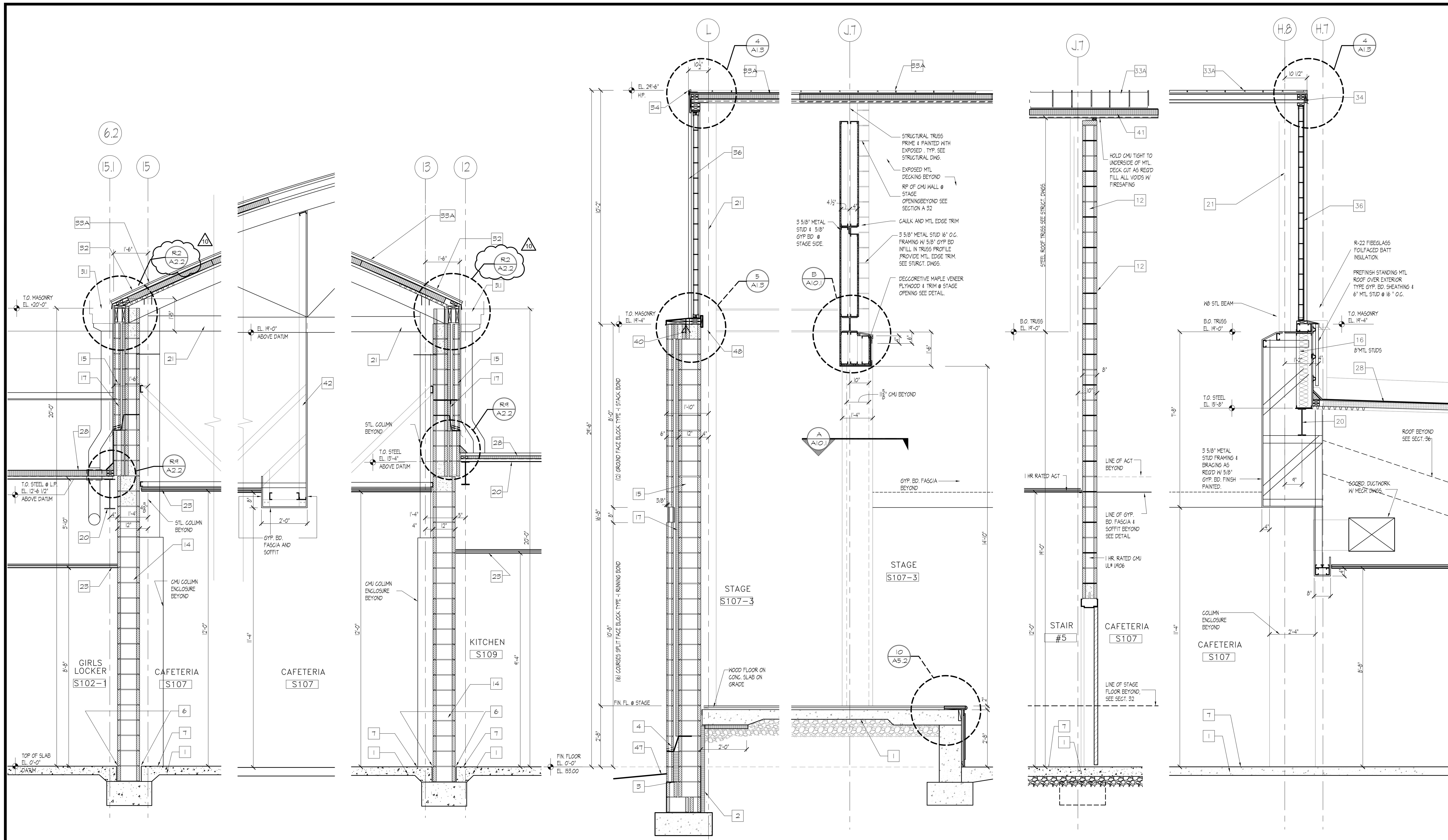

29 WALL SECTION 1/2"=1'-0"

29A PART WALL SECTION 1/2"=1'-0"

30 WALL SECTION 1/2"=1'-0"

31 WALL SECTION 1/2"=1'-0"

32 WALL SECTION 1/2"=1'-0"

32A WALL SECTION 1/2"=1'-0"

33 WALL SECTION 1/2"=1'-0"

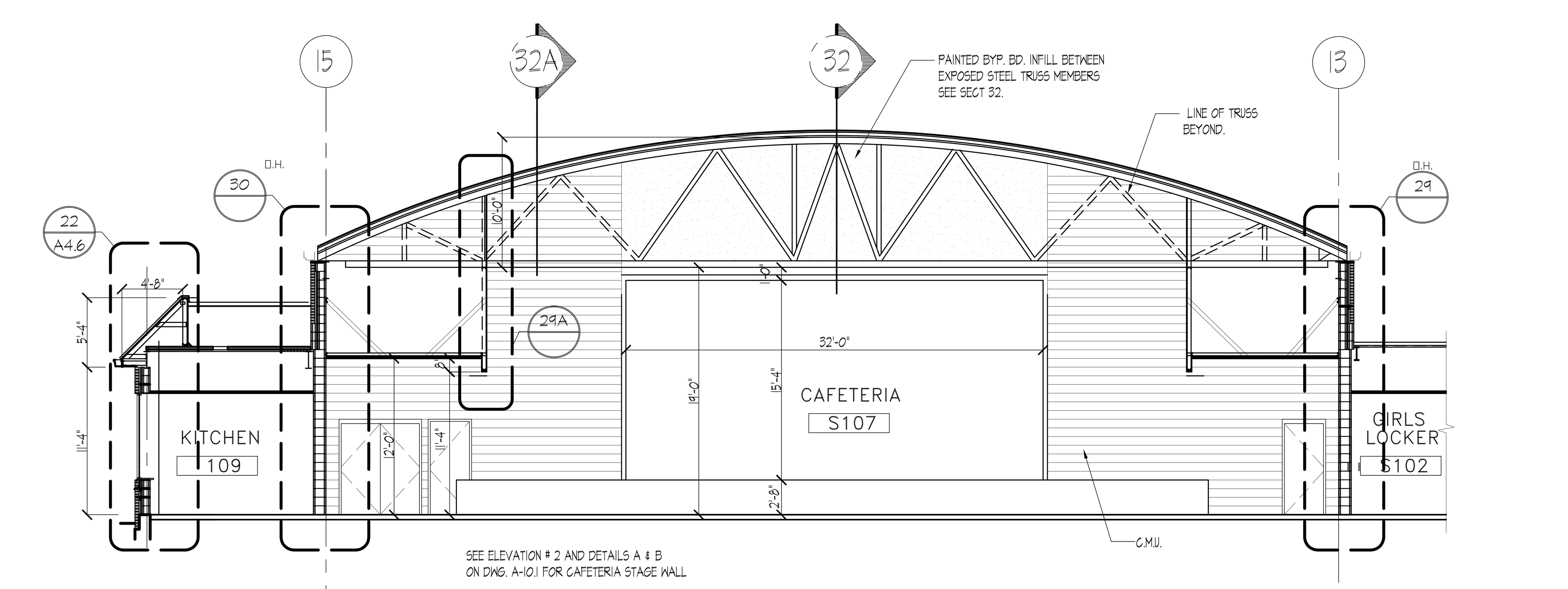

L CROSS SECTION THRU CAFETERIA 1/8" = 1'-0"

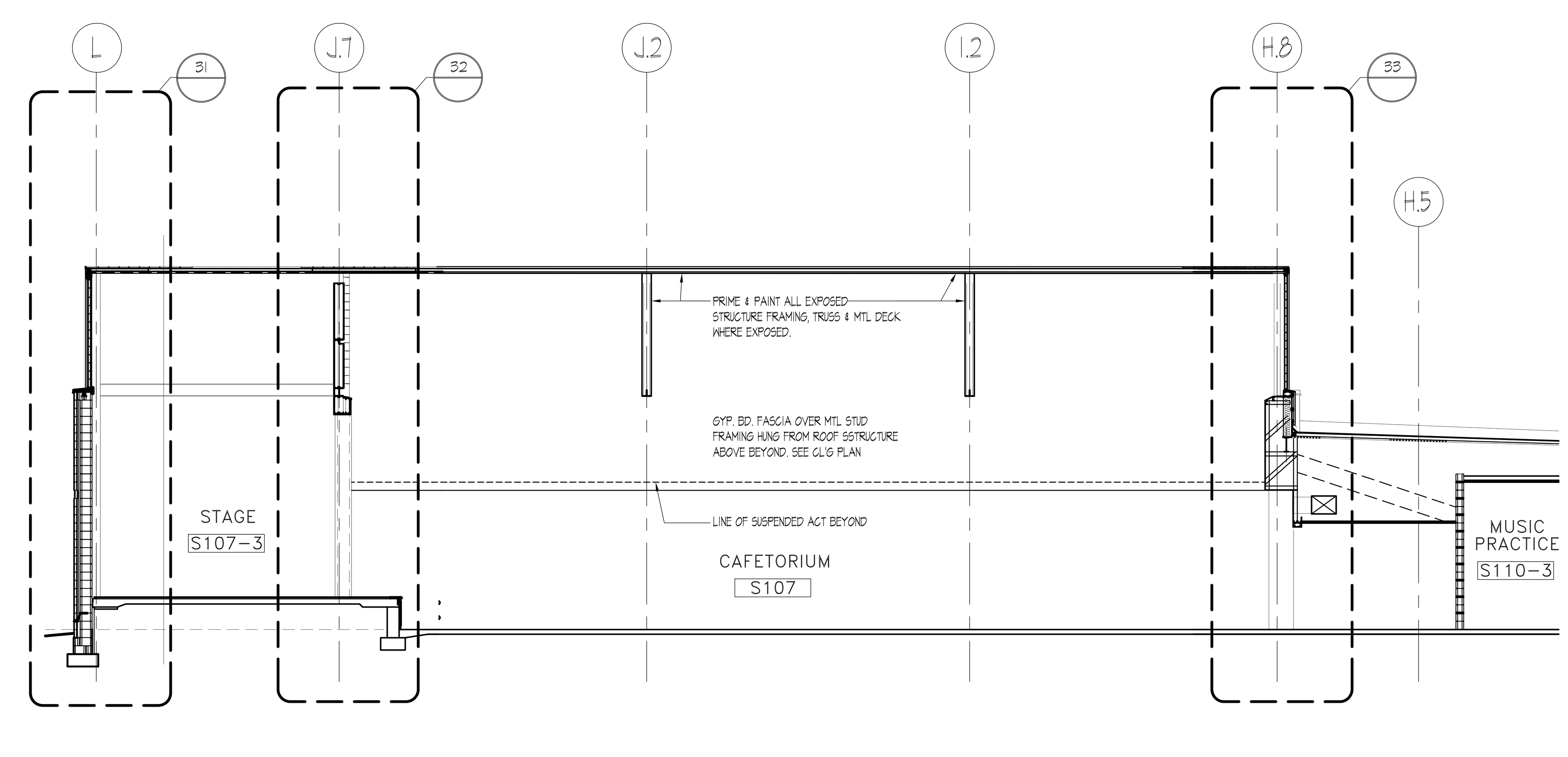

M LONGITUDINAL SECTION THRU CAFETERIA 1/8" = 1'-0"

KEYED WALL SECTION NOTES:

1 CONCRETE SLAB ON VAPOR BARRIER OVER CRUSHED STONE. SEE STRUCTURAL DWGS. FOR MORE INFO. (TYP)
2 2" THK. PERIMETER FOUNDATION WALL INSULATION
3 LINE OF BRICK SHELF @ FOUNDATION WALL TO REMAIN 8" MIN. BELOW GRADE COORDINATE GRADE W/ SITE / CIVIL PLANS AND VERIFY ACTUAL CONDITIONS IN FIELD (TYP.)
4 LINE OF THROUGH WALL FLASHING w/ TUBULAR WEEPS @ 24" oc TO REMAIN ABOVE GRADE. COORDINATE W/ SITE/CIVIL PLANS AND VERIFY ACTUAL CONDITIONS IN FIELD (TYP.)
5 PROVIDE "PEA" GRAVEL IN CAVITY MIN. 8" ABOVE THROUGH WALL FLASHING (TYP.)
6 1/2" THICK PRE MOLDED JOINT FILLER @ PERIMETER OF CONCRETE SLABS W/ BACKER ROD AND CONTINUOUS BEAD OF SEALANT. COORDINATE W/ STRUCTURAL DWG.
7 FINISHED FLOORING AND RESILIENT BASE (TYP.) COORDINATE W/ FIN. SCHEDULE
8 PRE FINISHED ALUMINUM ARCHITECTURAL LOUVER. COORDINATE WITH MECHANICAL DRAWINGS.
9 THROUGH WALL FLASHING W/ END DAMS ABOVE MASONRY OPENING W/ WEEPS @ 24" oc.
10 STEEL LINTELS, COORDINATE W/ STRUCT DWG.
11 GALVANIZED STEEL LINTELS, PAINTED @ EXTERIOR OPENINGS. SIZES SEE STRUCT DWG.
12 8" C.M.U. WALL W/ HORIZONTAL GALVANIZED STEEL REINFORCING @ 16" O.C.
13 6" C.M.U. WALL W/ HORIZONTAL GALVANIZED STEEL REINFORCING @ 16" O.C.
14 FIRE RATED 12" C.M.U. WALL W/ HORIZONTAL GALVANIZED STEEL REINFORCING @ 16" O.C.
15 TYPICAL EXTERIOR 'BRICK/BLOCK'WALL SYSTEM. 4" BRICK FACE W/2" AIR SPACE W/ CAVITY WALL INSULATION BOARD 1 1/2" THK. & 8" C.M.U. BACKUP OR 12" C.M.U. BACK U SEE PLAN. HORIZONTAL GALVANIZED WIRE REI FORCING @ 16" O.C. (TYP.) SEE STRUCT. DWG. FOR VERTICAL STEEL REINFORCEMENT WHERE REQUIRED.
16 6" METAL STUD 16 GA. 16" O.C. & 5/8" EXTER. GRADE GYP BD SHEATHING R-19 FIBERGLASS BATT INSULATION
17 CAVITY WALL INSULATION CLIP/ BRICK TIES @ 16" O.C. VERTICALLY AND HORIZONTALLY (TYP.)
18 CONC. SLAB W/ METAL DECK ON WF FRAMING SYSTEM. SEE STRUCT DWG
19 SPRAYED FIRE PROOFING FOR 1 HR. FIRE RATING REQUIREMENTS
20 STEEL WF BEAM / BAR JOIST/METAL DECK ROOF FRAMING SYSTEM REFER STRUCT. DWGS.
21 STEEL WF BEAM / STEEL TRUSS /METAL DECK ROOF FRAMING SYSTEM REFER STRUCT. DWGS.
22 PREENGINEERED LIGHT GA.METAL STUD TRUSS SYSTEM & 9/16" GALV.METAL DECK BY USD INC. ROOF FRAMING SYSTEM REFER STRUCT. DWGS.
23 CEILING SYSTEM (TYP.) REFER TO REFLECTED CEILING PLANS
24 SUSPENDED GYP. BD. CEILING, FASCIA & SOFFIT SYSTEMS (TYP.) REFER REFLECTED CEILING PLAN
25 ALUMINUM WINDOW - COORDINATE W/ SPECIFICATIONS, ELEVATIONS, WALL SECTIONS & FLOOR PLANS
26 GLAZED CURTAIN WALL SYSTEM
27 CONTINUOUS P.T. WOOD BLOCKING SECURED TO TOP OF MASONRY BY 3/8" X 8" ANCHOR BOLTS @ 2'-8" O.C. (TYP.)
28 ROOFING SYSTEM OVER 3" MIN. TAPERED INSULATION (TYP. OR OVER 3" UNIFORM INSULATION).
29 ASPHALT ROOF SHINGLES OVER 2 PLY FELT UNDERLAYMENT OVER VENTILATED NAILBASE OVER 3-INCH THICK RIGID INSULATION OVER 1/2" PROTECTION BOARD OVER METAL DECK. PROVIDE ICE AND WATERSHIELD AT EAVES, VALLEYS, HIPS, RIDGE AND PENETRATIONS. APPLY VAPOR BARRIER (PEEL & STICK ICE AND WATER SHIELD) OVER 1/2" PROTECTION BOARD
29.1 ASPHALT ROOF SHINGLES OVER 2 PLY FELT UNDERLAYMENT ON VENTILATED NAILBASE OVER 3" THICK RIGID INSULATION OVER 5/8" FIRE RETARDANT BASE SHEATHING. PROVIDE ICE AND WATERSHIELD AT EAVES, VALLEYS, HIPS, RIDGE, AND PENETRATIONS. APPLY VAPOR BARRIER (ICE & WATER SHIELD OVER 5/8" BASE SHEATHING
30 STANDING SEAM METAL ROOFING OVER 2 PLY FELT UNDERLAYMENT OVER 3/4" EXTERIOR GRADE PLYWOOD SUBSTRATE MECHANICALLY FASTENED TO METAL DECK. PROVIDE INTERGRAL FLAT PLATE AT TOP OF DECK FOR FASTENING. SCREWS TO LAND IN CLOSED CELL OF DECK SO AS NOT TO BE EXPOSED FROM UNDERSIDE OF CANOPY
30.1 STANDING SEAM METAL ROOF W/TRIMS @ PERIMETER OVER METAL DECK ON STEEL TRUSS SYSTEM PRIMED AND PAINTED, SIMILAR TO EXTERIOR TRUSSSYSTEM @ VESTIBULE
31 PREFIN. METAL FASCIA/SOFFIT SYSTEM TO MATCH METAL ROOFING W/ 3/4" FURRING CHANNELS/ MTL STUD FRAMING BRACE TO STRUCT. AND/ OR MASONRY.
31.1 PREFINISHED ALUM. GUTTER
31.2 PREFINISHED ALUM. DOWNSPOUT - SEE ELEVATIONS
31.3 CAST IRON DOWNSPOUT BOOT. J.R. SMITH MODEL No. 1786-24 OR APPROVED EQUAL. PRIME & FIN. PAINT. PROVIDE N-12 HIGH DENSITY POLYURETHANE PIPE (ADS). INCLUDE ALL FITTINGS, ADAPTERS, BENDS & HARDWARE NECESSARY TO COMPLETE DOWNSPOUT SYSTEM.
32 ICE/SNOW GUARD AT EAVES NEAR GUTTER @ SLOPING METAL ROOF. SPACING TO BE BY MFR'S STANDARD.
33 ASPHALT & COMPOSITE SHINGLES OVER 5/8" FIRE RETARDANT PLYWOOD SHEATHING AND 15LB ASPHALT FELT UNDERLAYMENT. FOR EAVES, VALLEYS & RIDGE FLASHING REQUIREMENTS REFER TO SPECS. & DETAILS ON DWGS. 2 SERIES. PROVIDE METAL DRIP EDGE AT EAVES.
33A STANDING METAL SEAM ROOF ASSEMBLY OVER 3" RIGID INSULATION (2LB/CU.FT.MIN. DENSITY) OVER 1/2" PROTECTION BOARD OVER METAL DECKING. APPLY VAPOR BARRIER (PEEL & STICK ICE AND WATER SHIELD) OVER 1/2" PROTECTION BOARD
34 CONTINUOUS ALUMINUM MANUFACTURED ROOF EDGE/ GRAVEL STOP SYSTEM (TYP.)
35 CONTINUOUS ALUMINUM MANUFACTURED COPING SYSTEM (TYP.)
36 KAL-WAL
37 5/4" THICK WOOD (CLEAR POPLAR) WINDOW WILL, PRIME & PAINTED
38 PRE-FINISHED STANDING SEAM ROOF W/ METAL FASCIA/SOFFIT & ALUM. GUTTER & DOWN SPOUT OVER EXTR. GRADE PLYWOOD SHEATHING & 15 LB ASPHALT FELT UNDERLAYMENT SUPPORTED ON LIGHT GA. METAL STUD FRAMING SYSTEM.
39 FILL BLOCK VENEER AT WINDOWS W/ GRANULAR INSULATION (TYP.)
40 FILL C.M.U. CORES SOLID CONTINUOUS AT ALL TRANSITIONS(TYP.).
41 6" (R-30) FIBERGLASS BATT INSULATION W/ RETAINER SECURED TO BOTTOM CHORD OF TRUSS (TYP.)
42 1/2" GYP. BOARD PRIMED & PAINTED OVER METAL STUD FRAMING ON 16" O.C.
43 5/8" REINF. GYP. BOARD PRIMED & PAINTED OVER METAL STUD FRAMING ON 16" O.C.
44 PREFINISHED ALUM. ENTRY DOORS & FRAMING SYSTEM. SEE DOOR SCHEDULE & DETAILS
45 RECESSED BRICK SOLDIER OR GFB VENEER ACCENT BAND. REFER TO ELEVATION
46 FOUNDATION WALL & REINF. CONC. FOOTING. REFER TO FOUNDATION PLAN-STRUCT. DWG.
47 APPROX. FIN. GRADE-REFER TO SITE GRADING PLAN
48 WF STEEL BEAM REFER TO STRUCT. DWGS.
49 4" HIGH VINYL BASE
50 COLD APPLIED, SPRAYED-ON WATERPROOFING SYSTEM FULL HEIGHT ON FOUNDATION WALL-TIE INTO SLAB SYSTEM
51 6"Ø PVC PERFORATED PERIMETER DRAIN W/ FILER FABRIC IN 12" GRAVEL SURROUND. COORD. W/ CIVIL
52 PRECAST 8" TERRAZZO BASE
53 PRECAST TERRAZZO TILE FLOORING
54 CERAMIC TILE FINISH OVER WATER RESISTANCE GYP. BD AT MTL STUD WALL.
55 1/2" GYP. BD. @ UNDERSIDE OF TRUSS ABOVE CORRIDOR ONLY.
56 1/2" GYP. BD. FULL HEIGHT @ CORRIDOR ONLY
57 SUSPENDED 1/2" GYP. BOARD PRIMED & PAINTED HUNG FROM STRUCTURE ABOVE
58 TYPICAL NOTE:WOOD FASCIA, BLOCKING, ROOF SHEATHING AND WOOD FILLERS SHALL BE FIRE RETARDANT TREATED WOOD
59 ½" BACKER ROD AND CHAULK CONTROL JOINT
60 PRE-APPLIED INTERGRALLY BONDED SHEET MEMBRANE WATERPROOFING SYSTEM - TIE INTO FOUNDATION WALL SYSTEM

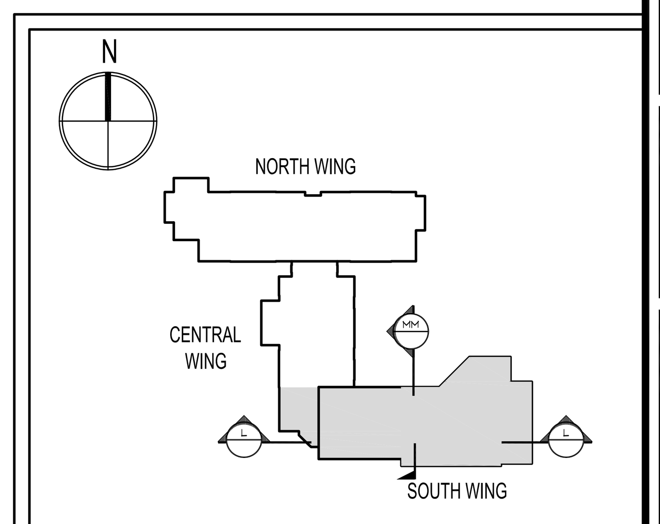

KEY PLAN N.T.S.

SDA
NJ SCHOOLS DEVELOPMENT AUTHORITY
STATE OF NEW JERSEY
ECONOMIC DEVELOPMENT AUTHORITY

DesignIdeasGroup architecture + planning, llc
15 Bethany Street New Brunswick, NJ 08901 T: 732.249.6242 F: 732.247.1825
142 West 36th Street New York, NY 10018 T: 645.584.8419
Richard D. Alderiso, AIA NJ RA AI 15023 NY RA 027416
Vincent A. Myers, AIA NJ RA AI 11415
Jeffrey D. Venezia, AIA NJ RA AI 08271 NY RA 023719-1
Warren W. Winter, AIA NJ RA AI 06853 NY RA 010562-1

CONSTRUCTION PROGRAM FOR THE
MARSHALL STREET ELEMENTARY SCHOOL
DOE# 4010-N01-02-0169
NJSDA# PA-0006-C04
DCA# OLCEHPC-05--013 ERU# 6095-05
ADDRESS
NJSDA
1 WEST STATE STREET
TRENTON, NEW JERSEY

PROJECT NO.: 2012-213.00

ISSUED
05/15/09 ISSUED FOR BID
07/06/09 ISSUED FOR BID
1 08/06/09 DCA REVIEW COMMENTS
9 12/17/12 SDA AMENDMENTS 11 & 12
10 03/25/13 ADDENDUM NO. 2

DRAWING TITLE
BUILDING AND WALL SECTIONS
CAFETORIUM

DRAWING No.
A-4.8
DWG. NO. OF

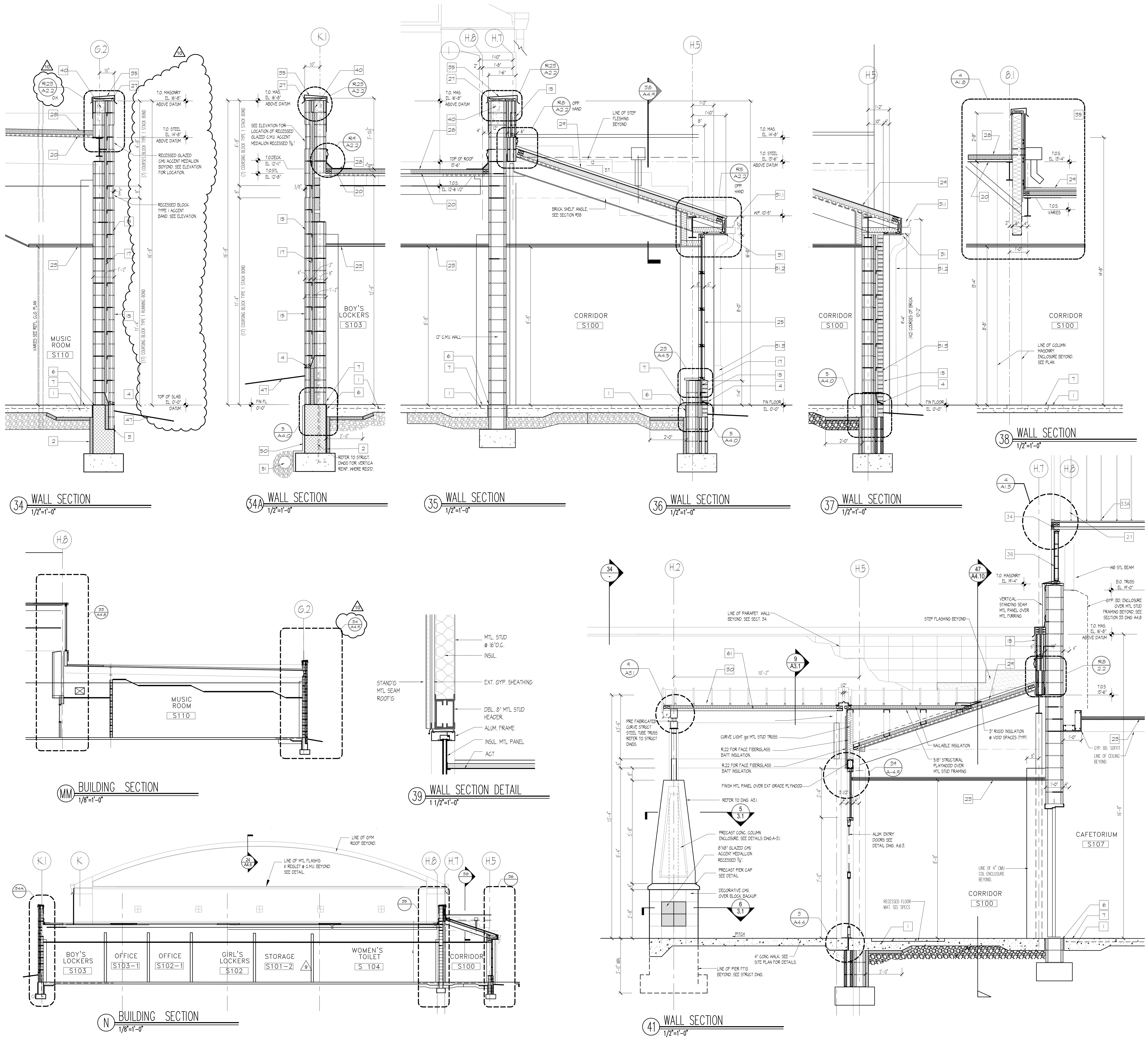

KEYED WALL SECTION NOTES:

1 CONCRETE SLAB ON VAPOR BARRIER OVER CRUSHED STONE. SEE STRUCTURAL DWGS. FOR MORE INFO. (TYP)
2 2" THK. PERIMETER FOUNDATION WALL INSULATION
3 LINE OF BRICK SHELF @ FOUNDATION WALL TO REMAIN 8" MIN. BELOW GRADE COORDINATE GRADE W/ SITE / CIVIL PLANS AND VERIFY ACTUAL CONDITIONS IN FIELD (TYP.)
4 LINE OF THROUGH WALL FLASHING W/ TUBULAR WEEPS @ 24" oc TO REMAIN ABOVE GRADE. COORDINATE W/ SITE/CIVIL PLANS AND VERIFY ACTUAL CONDITIONS IN FIELD (TYP.)
5 PROVIDE "PEA" GRAVEL IN CAVITY MIN. 8" ABOVE THROUGH WALL FLASHING (TYP.)
6 1/2" THICK PRE MOLDED JOINT FILLER @ PERIMETER OF CONCRETE SLABS W/ BACKER ROD AND CONTINUOUS BEAD OF SEALANT. COORDINATE W/ STRUCTURAL DWG.
7 FINISHED FLOORING AND RESILIENT BASE (TYP.) COORDINATE W/ FIN. SCHEDULE
8 PRE FINISHED ALUMINUM ARCHITECTURAL LOUVER. COORDINATE WITH MECHANICAL DRAWINGS.
9 THROUGH WALL FLASHING W/ END DAMS ABOVE MASONRY OPENING W/ WEEPS @ 24" oc.
10 STEEL LINTELS, COORDINATE W/ STRUCT DWG.
11 GALVANIZED STEEL LINTELS, PAINTED @ EXTERIOR OPENINGS . SIZES SEE STRUCT DWG.
12 8" C.M.U. WALL W/ HORIZONTAL GALVINIZED STEEL REINFORCING @ 16" O.C.
13 6" C.M.U. WALL W/ HORIZONTAL GALVINIZED STEEL REINFORCING @ 16" O.C.
14 FIRE RATED 12" C.M.U. WALL W/ HORIZONTAL GALVINIZED STEEL REINFORCING @ 16" O.C.
15 TYPICAL EXTERIOR "BRICK/BLOCK"WALL SYSTEM. 4" BRICK FACE W/2" AIR SPACE W/ CAVITY WALL INSULATION BOARD 1 1/2" THK. & 8" C.M.U. BACKUP OR 12" C.M.U. BACK U SEE PLAN. HORIZONTAL GALVANIZED WIRE REI FORCING @ 16" O.C. (TYP.) SEE STRUCT. DWG. FOR VERTICAL STEEL REINFORCEMENT WHERE REQUIRED.
16 6" METAL STUD 16 GA. 16" O.C. & 5/8" EXTER. GRADE GYP BD SHEATHING R-19 FIBERGLASS BATT INSULATION
17 CAVITY WALL INSULATION CLIP/ BRICK TIES @ 16" O.C. VERTICALLY AND HORIZONTALLY (TYP)
18 CONC. SLAB W/ METAL DECK ON WF FRAMING SYSTEM. SEE STRUCT DWG
19 SPRAYED FIRE PROOFING FOR 1 HR. FIRE RATING REQUIREMENTS
20 STEEL WF BEAM / BAR JOIST/METAL DECK ROOF FRAMING SYSTEM REFER STRUCT. DWGS.
21 STEEL WF BEAM / STEEL TRUSS /METAL DECK ROOF FRAMING SYSTEM REFER STRUCT. DWGS.
22 PREENGINEERED LIGHT GA.METAL STUD TRUSS SYSTEM & 9/16" GALV.METAL DECK BY USD INC. ROOF FRAMING SYSTEM REFER STRUCT. DWGS.
23 CEILING SYSTEM (TYP.) REFER TO REFLECTED CEILING PLANS
24 SUSPENDED GYP. BD. CEILING, FASCIA & SOFFIT SYSTEMS (TYP.) REFER REFLECTED CEILING PLAN
25 ALUMINUM WINDOW - COORDINATE W/ SPECIFICATIONS, ELEVATIONS, WALL SECTIONS & FLOOR PLANS
26 GLAZED CURTAIN WALL SYSTEM
27 CONTINUOUS P.T. WOOD BLOCKING SECURED TO TOP OF MASONRY BY 3/8" X 8" ANCHOR BOLTS @ 2'-8" O.C. (TYP.)
28 ROOFING SYSTEM OVER 3" MIN. TAPERED INSULATION TYP. OR OVER 3" UNIFORM INSULATION).
29 ASPHALT ROOF SHINGLES OVER 2 PLY FELT UNDERLAYMENT OVER VENTILATED NAILBASE OVER 3-INCH THICK RIGID INSULATION OVER 1/2" PROTECTION BOARD OVER METAL DECK. PROVIDE ICE AND WATERSHIELD AT EAVES, VALLEYS, HIPS, RIDGE AND PENETRATIONS. APPLY VAPOR BARRIER (PEEL & STICK ICE AND WATER SHIELD) OVER 1/2" PROTECTION BOARD
29.1 ASPHALT ROOF SHINGLES OVER 2 PLY FELT UNDERLAYMENT ON VENTILATED NAILBASE OVER 3" THICK RIGID INSULATION OVER 5/8" FIRE RETARDANT BASE SHEATHING. PROVIDE ICE AND WATERSHIELD AT EAVES, VALLEYS, HIPS, RIDGE, AND PENETRATIONS. APPLY VAPOR BARRIER (ICE & WATER SHIELD OVER 5/8" BASE SHEATHING
30 STANDING SEAM METAL ROOFING OVER 2 PLY FELT UNDERLAYMENT OVER 3/4" EXTERIOR GRADE PLYWOOD SUBSTRATE MECHANICALLY FASTENED TO METAL DECK. PROVIDE INTERGRAL FLAT PLATE AT TOP OF DECK FOR FASTENING. SCREWS TO LAND IN CLOSED CELL OF DECK SO AS NOT TO BE EXPOSED FROM UNDERSIDE OF CANOPY
30.1 STANDING SEAM METAL ROOF W/TRIMS @ PERIMETER OVER METAL DECK ON STEEL TRUSS SYSTEM. PRIMED AND PAINTED, SIMILAR TO EXTERIOR TRUSSSYSTEM @ VESTIBULE
31 PREFIN. METAL FASCIA/SOFFIT SYSTEM TO MATCH METAL ROOFING W/ 3/4" FURRING CHANNELS/ MTL STUD FRAMING BRACE TO STRUCT. AND/ OR MASONRY.
31.1 PREFINISHED ALUM. GUTTER
31.2 PREFINISHED ALUM. DOWNSPOUT - SEE ELEVATIONS
31.3 CAST IRON DOWNSPOUT BOOT. J.R. SMITH MODEL No. 1786-24 OR APPROVED EQUAL. PRIME & FIN PAINT. PROVIDE N-12 HIGH DENSITY POLYURETHANE PIPE (ADS). INCLUDE ALL FITTINGS, ADAPTERS, BENDS & HARDWARE NECESSARY TO COMPLETE DOWNSPOUT SYSTEM.
32 ICE/SNOW GUARD AT EAVES NEAR GUTTER @ SLOPING METAL ROOF. SPACING TO BE BY MFR'S STANDARD.
33 ASPHALT & COMPOSITE SHINGLES OVER 5/8" FIRE RETARDANT PLYWOOD SHEATHING AND 15LB ASPHALT FELT UNDERLAYMENT. FOR EAVES, VALLEYS & RIDGE FLASHING REQUIREMENTS REFER TO SPECS. & DETAILS ON DWGS. 2 SERIES. PROVIDE METAL DRIP EDGE AT EAVES
33A STANDING METAL SEAM ROOF ASSEMBLY OVER 3" RIGID INSULATION (2LB/CUFT.MIN. DENSITY) OVER 1/2" PROTECTION BOARD OVER METAL DECKING. APPLY VAPOR BARRIER (PEEL & STICK ICE AND WATER SHIELD) OVER 1/2" PROTECTION BOARD
34 CONTINUOUS ALUMINUM MANUFACTURED ROOF EDGE/ GRAVEL STOP SYSTEM (TYP.)
35 CONTINUOUS ALUMINUM MANUFACTURED COPING SYSTEM (TYP.)
36 KAL-WAL
37 5/4" THICK WOOD (CLEAR POPLAR) WINDOW WILL, PRIME & PAINTED
38 PRE-FINISHED STANDING SEAM ROOF W/ METAL FASCIA/SOFFIT & ALUM. GUTTER & DOWN SPOUT OVER EXTR. GRADE PLYWOOD SHEATHING & 15 LB ASPHALT FELT UNDERLAYMENT SUPPORTED ON LIGHT GA. METAL STUD FRAMING SYSTEM.
39 FILL BLOCK VENEER AT WINDOWS W/ GRANULAR INSULATION (TYP.)
40 FILL C.M.U. CORES SOLID CONTINUOUS AT ALL TRANSITIONS(TYP).
41 6" (R-30) FIBERGLASS BATT INSULATION W/ RETAINER SECURED TO BOTTOM CHORD OF TRUSS (TYP.)
42 1/2" GYP. BOARD PRIMED & PAINTED OVER METAL STUD FRAMING ON 16" O.C.
43 5/8" REINF. GYP. BOARD PRIMED & PAINTED OVER METAL STUD FRAMING ON 16" O.C.
44 PREFINISHED ALUM. ENTRY DOORS & FRAMING SYSTEM. SEE DOOR SCHEDULE & DETAILS
45 RECESSED BRICK SOLDIER OR GFB VENEER ACCENT BAND. REFER TO ELEVATION
46 FOUNDATION WALL & REINF. CONC. FOOTING. REFER TO FOUNDATION PLAN-STRUCT. DWG.
47 APPROX. FIN. GRADE-REFER TO SITE GRADING PLAN
48 WF STEEL BEAM. REFER TO STRUCT. DWGS.
49 4" HIGH VINYL BASE
50 COLD APPLIED, SPRAYED-ON WATERPROOFING SYSTEM FULL HEIGHT ON FOUNDATION WALL-TIE INTO SLAB SYSTEM
51 6"Ø PVC PERFORATED PERIMETER DRAIN W/ FILER FABRIC IN 12" GRAVEL SURROUND. COORD. W/ CIVIL
52 PRECAST 8" TERRAZZO BASE
53 PRECAST TERRAZZO TILE FLOORING
54 CERAMIC TILE FINISH OVER WATER RESISTANCE GYP. BD AT MTL STUD WALL.
55 1/2" GYP. BD. @ UNDERSIDE OF TRUSS ABOVE CORRIDOR ONLY.
56 1/2" GYP. BD. FULL HEIGHT @ CORRIDOR ONLY
57 SUSPENDED 1/2" GYP. BOARD PRIMED & PAINTED HUNG FROM STRUCTURE ABOVE
58 TYPICAL NOTE:WOOD FASCIA, BLOCKING, ROOF SHEATHING AND WOOD FILLERS SHALL BE FIRE RETARDANT TREATED WOOD
59 1/2" BACKER ROD AND CHAULK CONTROL JOINT
60 PRE-APPLIED INTERGRALLY BONDED SHEET MEMBRANE WATERPROOFING SYSTEM - TIE INTO FOUNDATION WALL SYSTEM
61 EXPOSED STRUCTURAL STEEL MEMBERS AND METAL DECKING TO RECIEVE HIGH PERFORMANCE PAINT COATING PER SPECIFICATION SECTION 09960 (TYP. AT ALL EXTERIOR CANOPIES, ROOF OVERHANGS, BRACKETS AND STEEL PLATES)

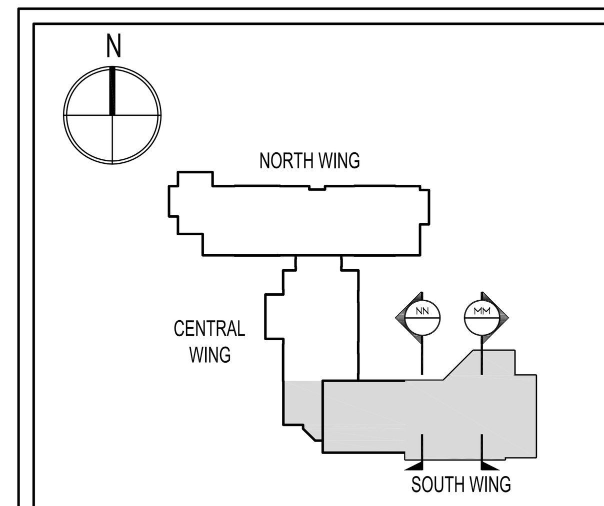

KEY PLAN N.T.S.

SDA
NJ SCHOOLS DEVELOPMENT AUTHORITY
STATE OF NEW JERSEY
ECONOMIC DEVELOPMENT AUTHORITY

Design Ideas Group
architecture + planning, llc
15 Bethany Street
New Brunswick, NJ 08901
T: 732.249.6242
F: 732.247.1825
60 West Broad Street
Bethlehem, PA 18018
T: 610.807.0420
F: 610.807.0602

Richard D. Alderiso, AIA
NJ RA AI 15023 NY RA 027416
Robert M. Iamello, AIA
NJ RA 08585 NY RA 018723 DE RA S5-0006594 NH RA 2813
Vincent A. Myers, AIA
NJ RA AI 11415
Joseph P. Tomaino, AIA PP
NJ RA C6086 NJ PP 2442 PA RA B6732 CT RA 9650
DC RA ARC100054 DE RA S5-0006679 MD RA 8887
VA RA 0401011785 VT RA 03-0001370
Jeffrey D. Venezia, AIA
NJ RA AI 08271 NY RA 023719-1
Warren W. Winter, AIA
NJ RA AI 06853 NY RA 010562-1

CONSTRUCTION PROGRAM FOR THE
MARSHALL STREET ELEMENTARY SCHOOL
DOE# 4010-N01-02-0169
NJSDA# PA-0006-C03
DCA# OLCEHPC-05--013 ERU# 6095-05
ADDRESS
NJ SDA
WEST STATE STREET
TRENTON, NEW JERSEY

JOB NO. 23110

ISSUED
05/15/09 ISSUED FOR BID
07/06/09 ISSUED FOR BID
1 08/06/09 DCA REVIEW COMMENTS
2 01/19/10 REVISED; RFI No. 00019
9 12/17/12 SDA AMENDMENTS 11 & 12
10 03/25/13 ADDENDUM NO. 2

DRAWING TITLE
BUILDING AND WALL SECTIONS

DRAWING No.
A-4.9
DWG. NO. OF

Drawing name: P:\2012\2012-213.00 Marshall St Elementary - Restart\DRAWINGS\Condocs\A4_WALL SECTIONS\213-A4.9.dwg Plotted By : MFERRAGAMO Mar 25, 2013 - 6:09pm

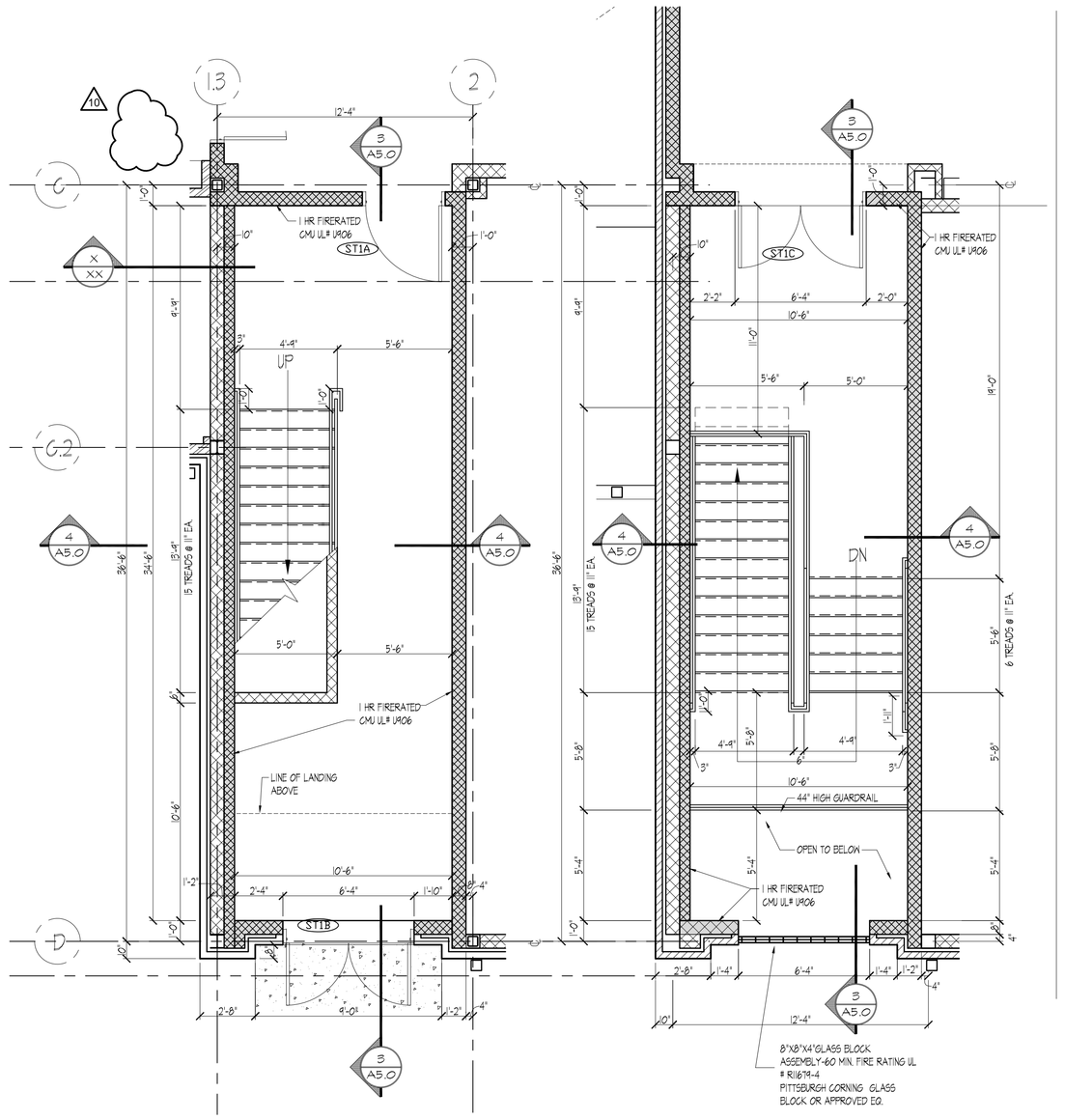

1 FIRST FLOOR PLAN STAIR-1
1/4"=1'-0"

2 SECOND FLOOR PLAN STAIR-1
1/4"=1'-0"

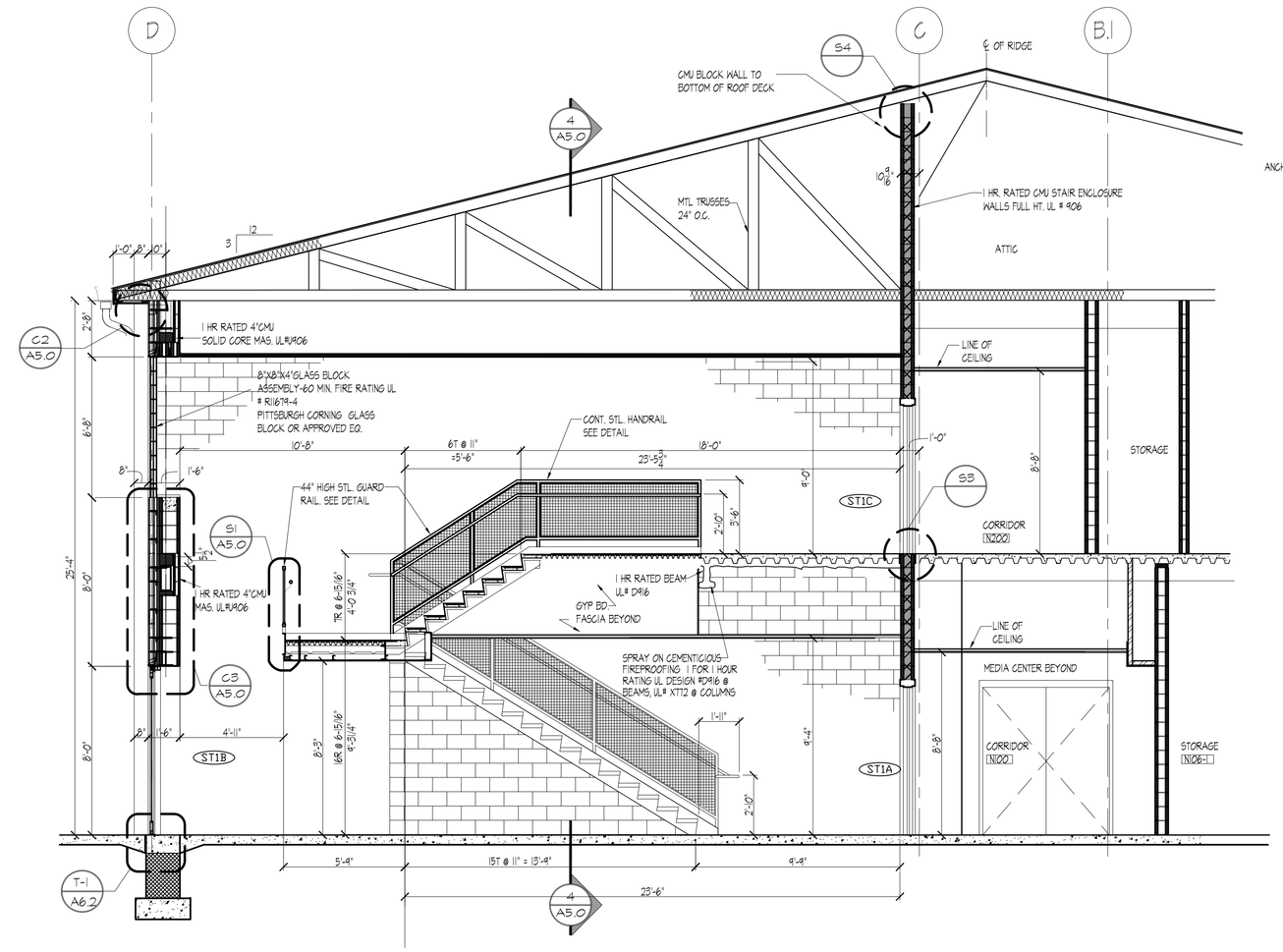

3 SECTION STAIR-1
1/4"=1'-0"

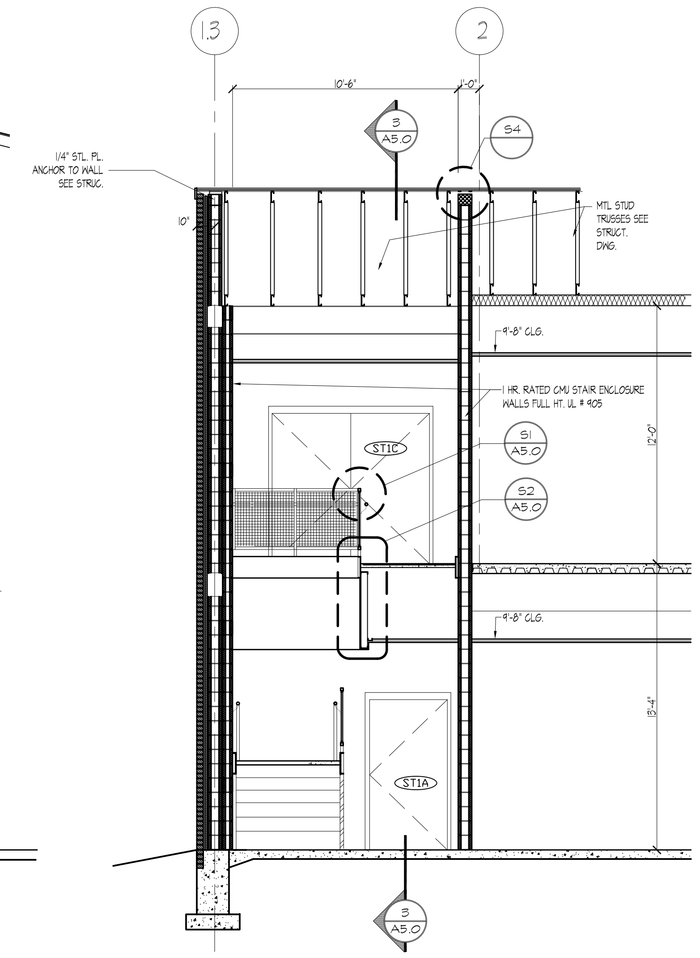

4 SECTION STAIR-1
1/4"=1'-0"

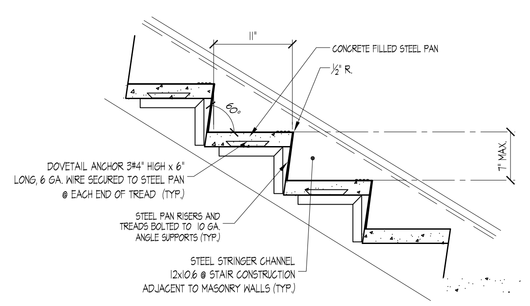

B STAIR DETAILS
NTS

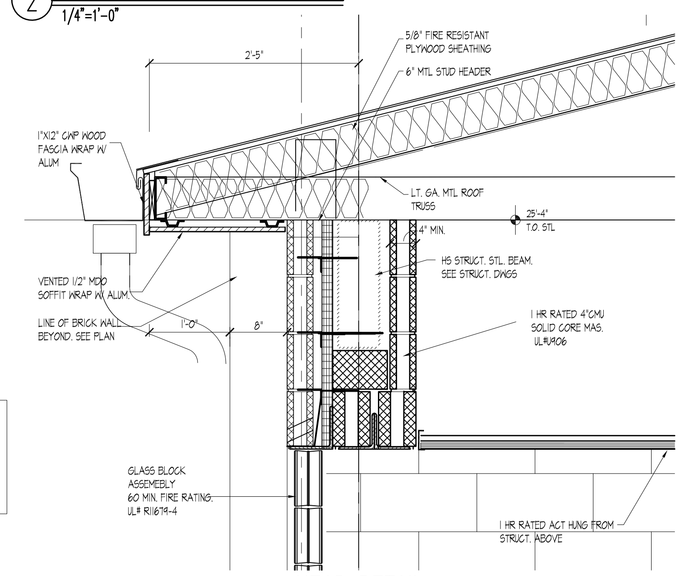

C2 HEAD DETAIL
1"=1'-0"

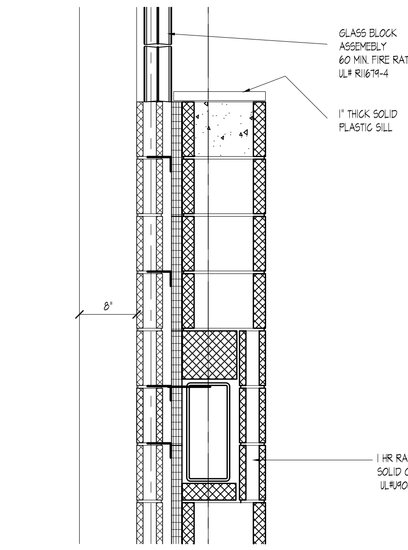

C3 DETAIL
1"=1'-0"

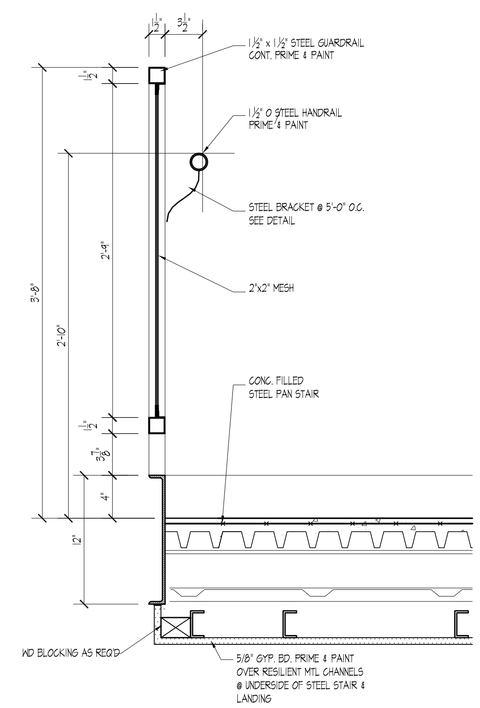

S1 RAIL DETAIL
1 1/2"=1'-0"

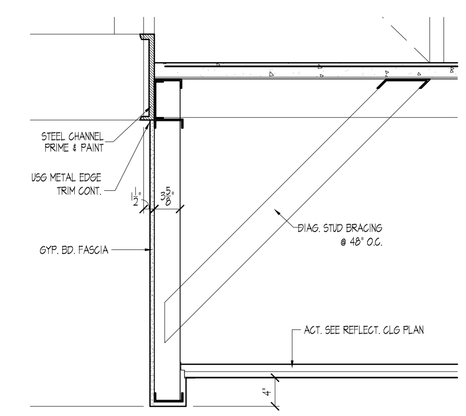

S2 FASCIA DETAIL
1"=1'-0"

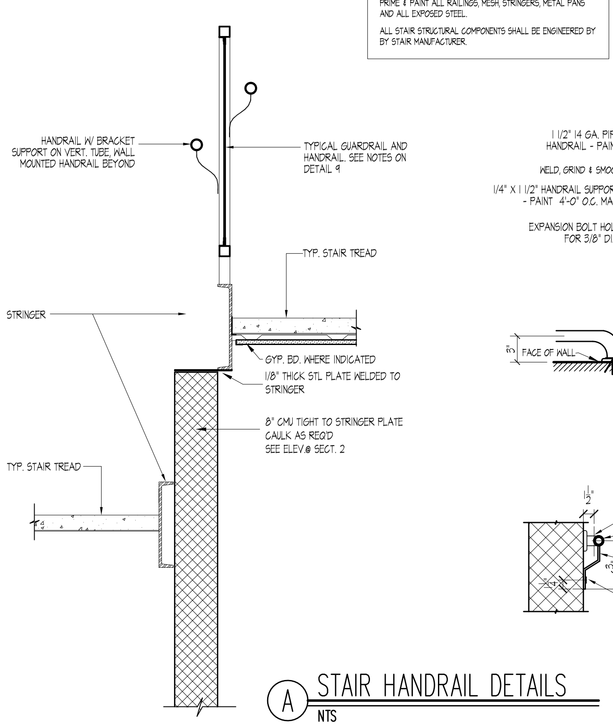

A STAIR HANDRAIL DETAILS
NTS

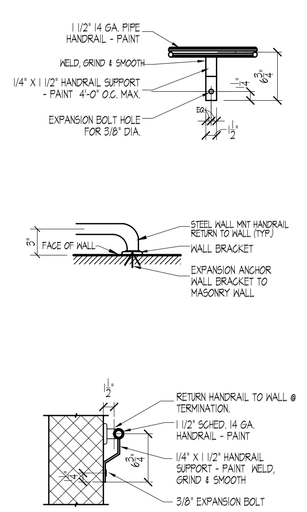

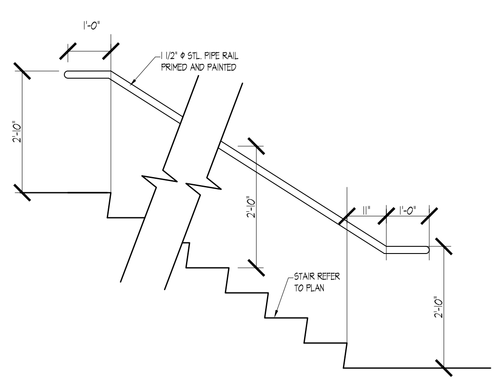

C STAIR DETAILS
NTS

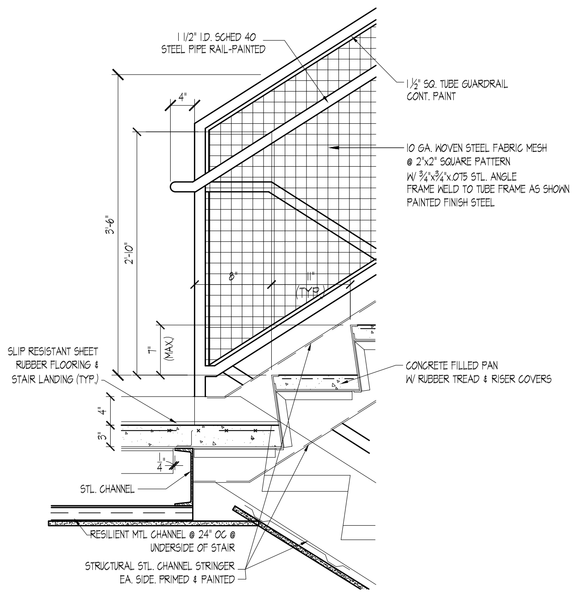

D TYP. STAIR LANDING DETAIL
1"=1'-0"

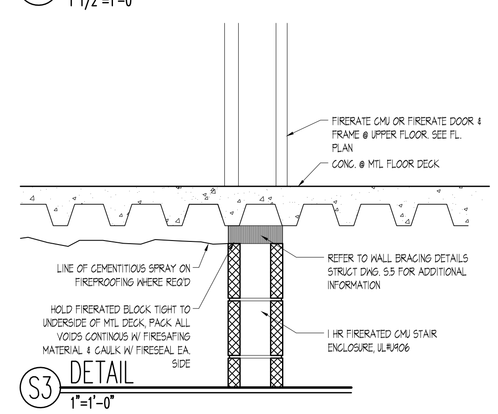

S3 DETAIL
1"=1'-0"

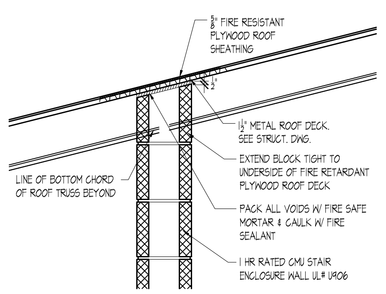

S4 DETAIL
1"=1'-0"

NOTES:

GRIND ALL WELDS SMOOTH

PRIME & PAINT ALL RAILINGS, MESH, STRINGERS, METAL PANS AND ALL EXPOSED STEEL

ALL STAIR STRUCTURAL COMPONENTS SHALL BE ENGINEERED BY BY STAIR MANUFACTURER

NOTE:
ALL FRAMING LUMBER, WOOD DECKING & SHEATHING SHOULD BE FIRE RESISTANT

SDA
NJ SCHOOLS DEVELOPMENT AUTHORITY

STATE OF NEW JERSEY
ECONOMIC DEVELOPMENT AUTHORITY

DesignIdeasGroup
architecture + planning, llc
15 Bethany Street
New Brunswick, NJ 08901
T: 732.249.6242
F: 732.247.1825
142 West 36th Street
New York, NY 10018
T: 645.584.8419

Richard D. Alderiso, AIA
NJ RA AI 15023 NY RA 027416

Vincent A. Myers, AIA
NJ RA AI 11415

Jeffrey D. Venezia, AIA
NJ RA AI 08271 NY RA 023719-1

Warren W. Winter, AIA
NJ RA AI 06853 NY RA 010562-1

CONSTRUCTION PROGRAM FOR THE
MARSHALL STREET ELEMENTARY SCHOOL
DOE# 4010-N01-02-0169
NJSDA# PA-0006-C04
DCA# OLCEHPC-05--013 ERU# 6095-05
ADDRESS
NJSDA
1 WEST STATE STREET
TRENTON, NEW JERSEY

PROJECT NO.: 2012-213.00

ISSUED

05/15/09	ISSUED FOR BID
07/06/09	ISSUED FOR BID
1 08/06/09	DCA REVIEW COMMENTS
2 03/25/13	ADDENDUM NO. 2

DRAWING TITLE
STAIR PLANS & SECTIONS
STAIRWELL 1

DRAWING No.
A-5.0
DWG. NO. OF

Drawing name: P:\2012\2012-213.00 Marshall St Elementary - Master\DRAWINGS\Contract\A5_STAIRS\S1-S1-A5.dwg Mar 25, 2013 - 6:17pm Plotted By: MERRIAM

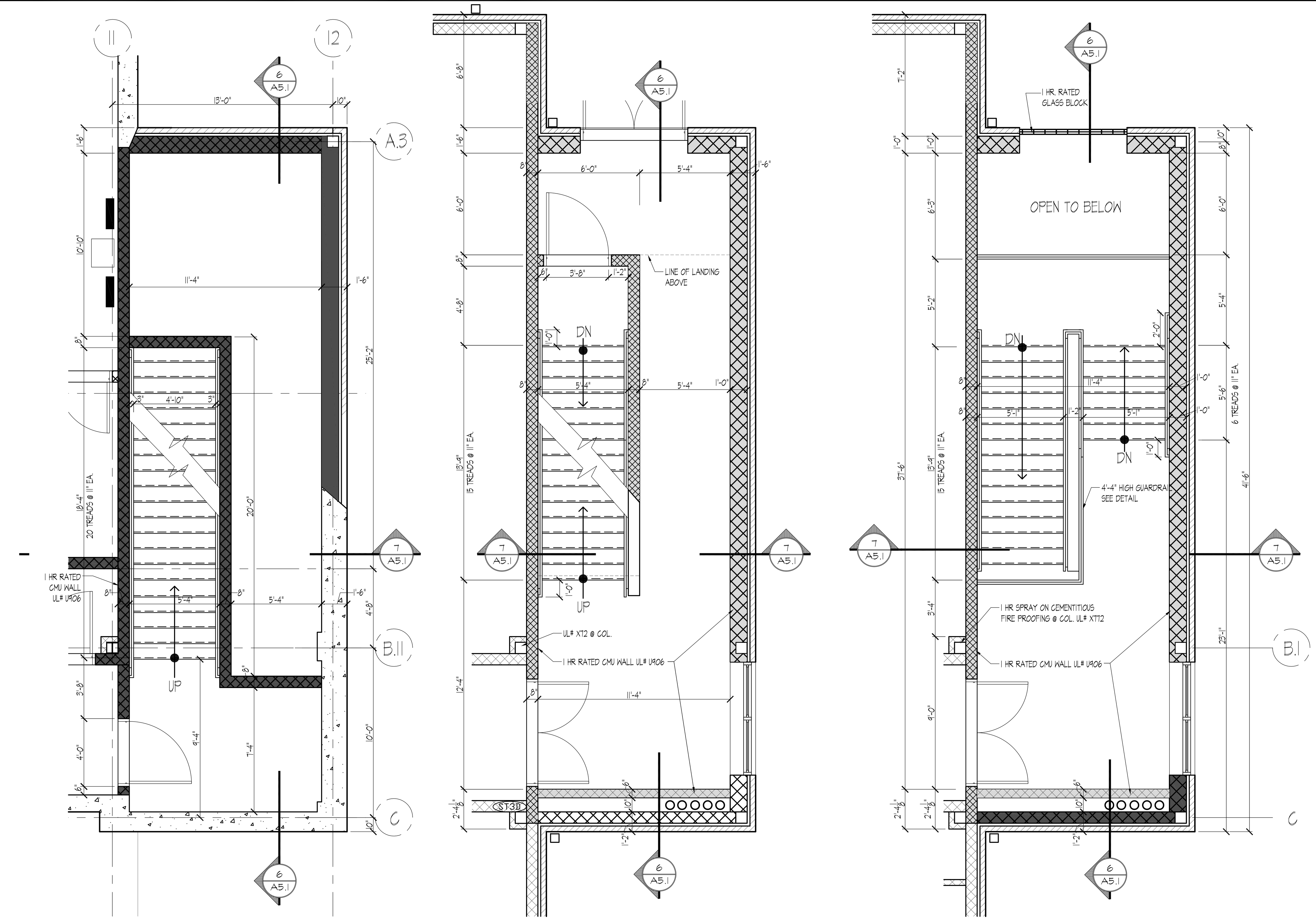

1 BASEMENT PLAN STAIR-3
1/4"=1'-0"

2 1ST FLOOR PLAN STAIR-3
1/4"=1'-0"

3 2ND FLOOR PLAN STAIR-3
1/4"=1'-0"

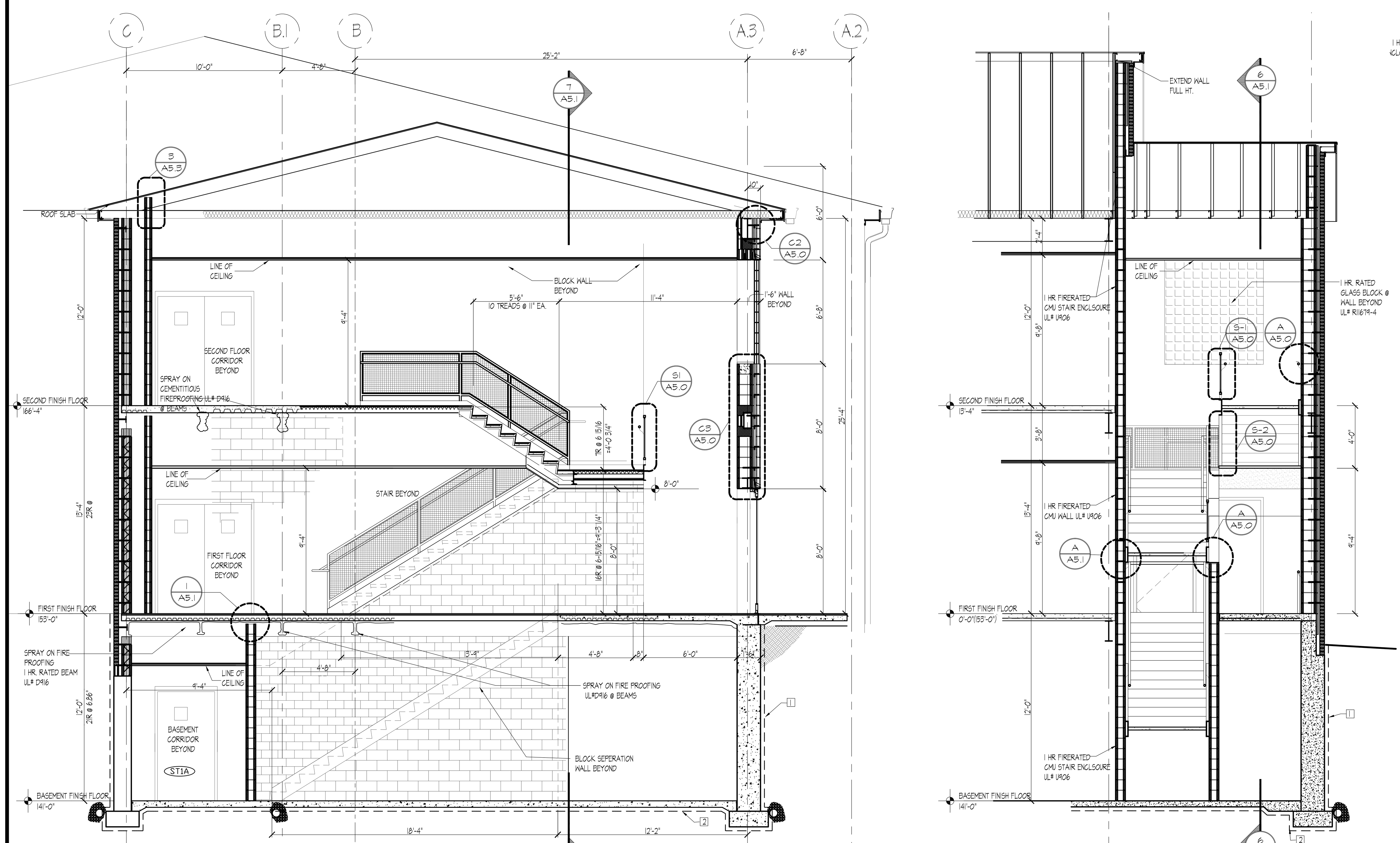

6 SECTION STAIRWELL-3
1/4"=1'-0"

7 SECTION STAIRWELL-3
1/4"=1'-0"

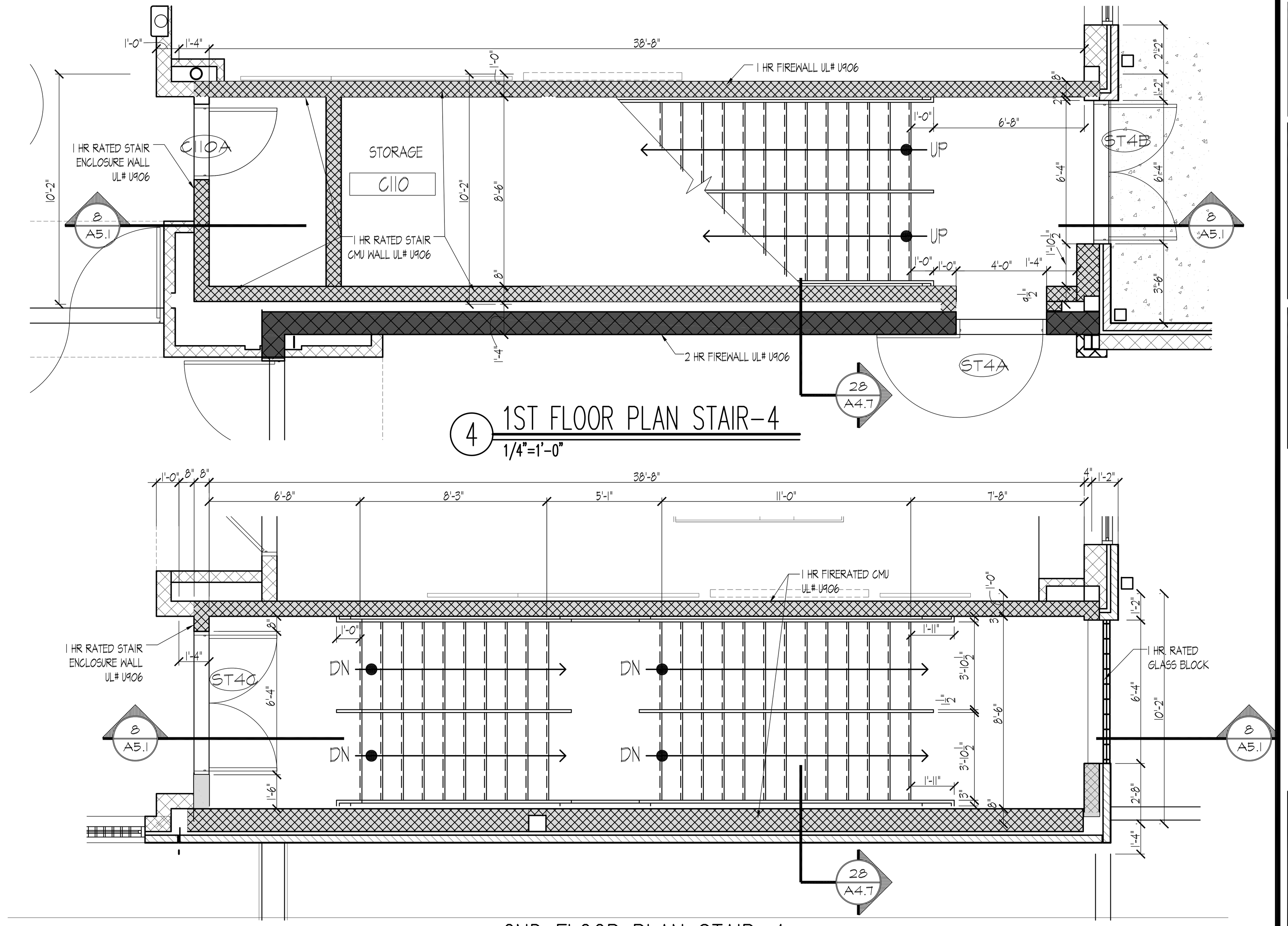

4 1ST FLOOR PLAN STAIR-4
1/4"=1'-0"

5 2ND FLOOR PLAN STAIR-4
1/4"=1'-0"

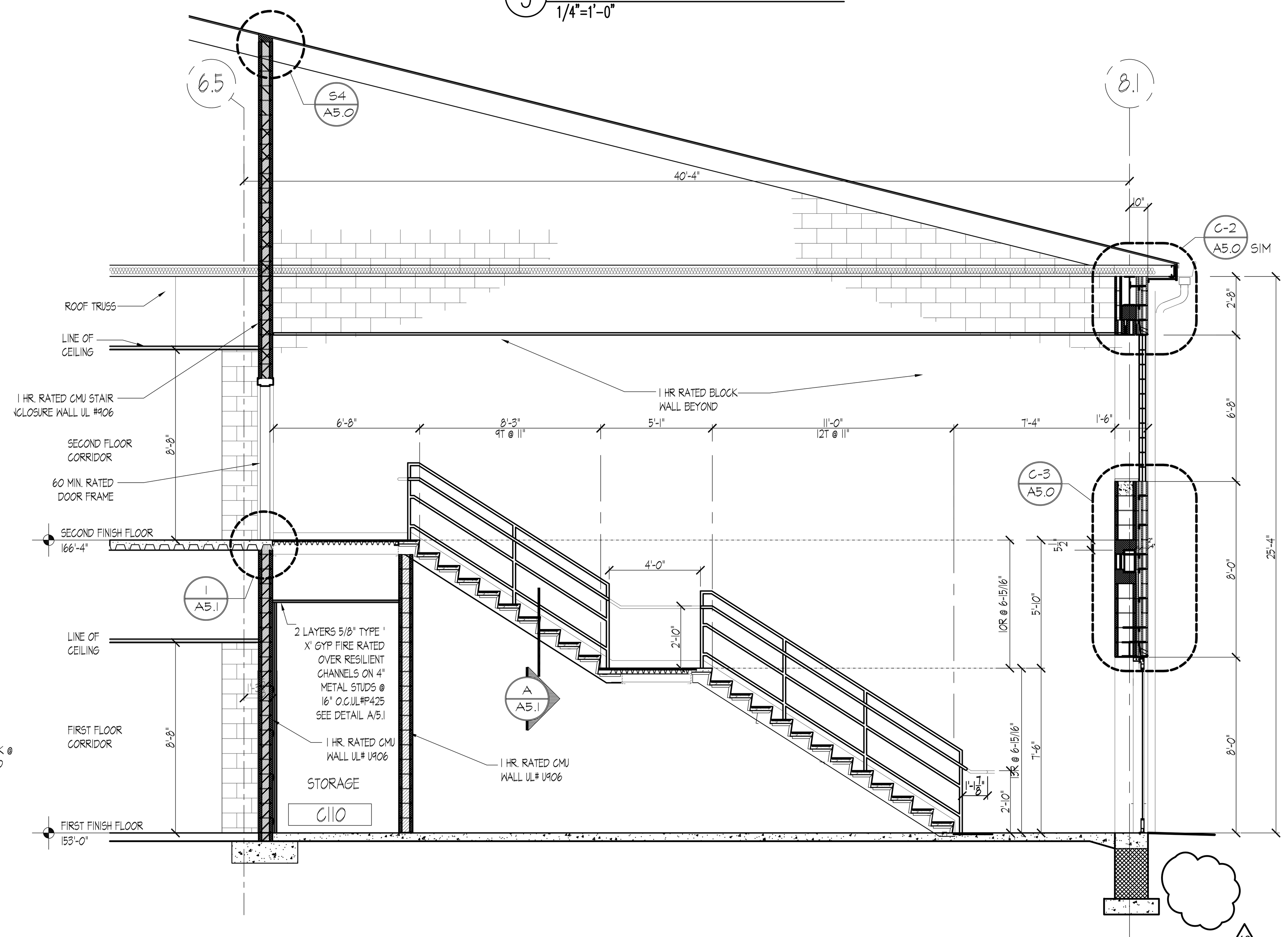

8 SECTION STAIRWELL-4
1/4"=1'-0"

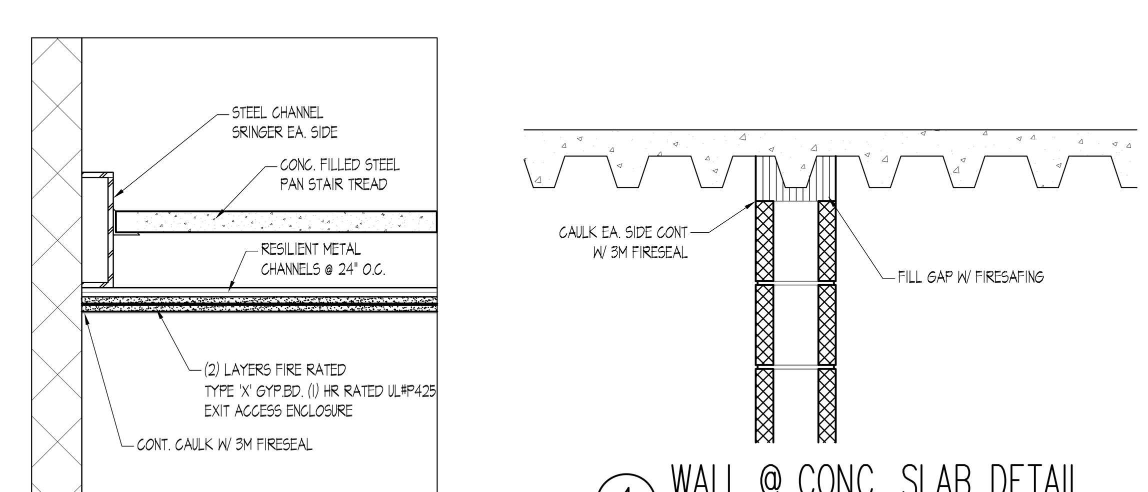

A STAIR SECTION
1"=1'-0"

1 WALL @ CONC. SLAB DETAIL
1"=1'-0"

WATER PROOFING NOTES

1. PROVIDE COLD-APPLIED, SPRAYED-ON WATERPROOFING TO ENTIRE BASEMENT PERIMETER FOUNDATION WALLS (FULL HEIGHT) AND ELEVATOR PIT. SEE SPECIFICATION SECTION 07141 FOR SYSTEM INFORMATION. (APPLIES TO ALL PERIMETER SHOWN ON THIS BASEMENT PLAN)
2. PROVIDE PRE-APPLIED INTEGRALLY BONDED SHEET MEMBRANE WATERPROOFING TO BLIND SIDE OF ENTIRE BASEMENT SLAB AND ELEVATOR PIT SLAB. SEE SPECIFICATION SECTION 07135 FOR SYSTEM INFORMATION. (APPLIES TO ALL AREAS SHOWN ON THIS BASEMENT PLAN)

NOTE:
ALL FRAMING LUMBER, WOOD DECKING & SHEATHING SHOULD BE FIRE RESISTANT

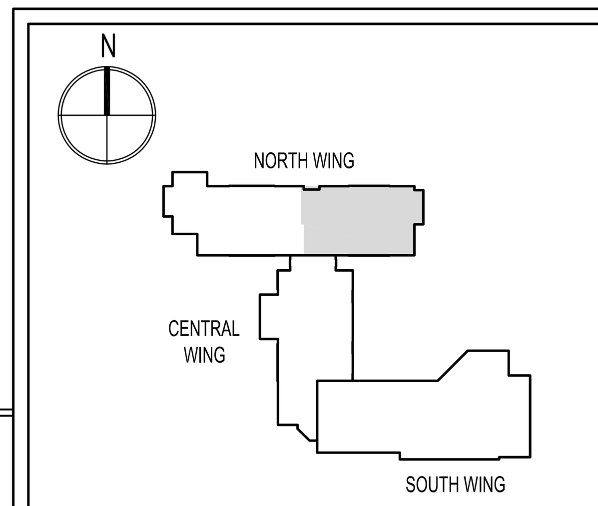

KEY PLAN N.T.S.

SDA
NJ SCHOOLS DEVELOPMENT AUTHORITY
STATE OF NEW JERSEY
ECONOMIC DEVELOPMENT AUTHORITY

DesignIdeasGroup
architecture + planning, llc
15 Bethany Street
New Brunswick, NJ 08901
T: 732.249.6242
F: 732.247.1825
60 West Broad Street
Bethlehem, PA 18018
T: 610.807.0420
F: 610.807.0602

Richard D. Alderiso, AIA
NJ RA AI 15023 NY RA 027416
Robert M. Iamello, AIA
NJ RA 08585 NY RA 018723 DE RA S5-0006594 NH RA 2813
Vincent A. Myers, AIA
NJ RA AI 11415
Joseph P. Tomaino, AIA PP
NJ RA C6086 NJ PP 2442 PA RA B6732 CT RA 9650
DC RA ARC100054 DE RA S5-0006679 MD RA 8887
VA RA 0401011785 VT RA 03-0001370
Jeffrey D. Venezia, AIA
NJ RA AI 08271 NY RA 023719-1
Warren W. Winter, AIA
NJ RA AI 06853 NY RA 010562-1

CONSTRUCTION PROGRAM FOR THE
MARSHALL STREET ELEMENTARY SCHOOL
DOE# 4010-N01-02-0169
NJSDA# PA-0006-C03
DCA# OLCEHPC-05--013 ERU# 6095-05
ADDRESS
NJ SDA
WEST STATE STREET
TRENTON, NEW JERSEY

JOB NO. 23110

ISSUED
05/15/09 ISSUED FOR BID
07/06/09 ISSUED FOR BID
1 08/06/09 DCA REVIEW COMMENTS
9 12/17/12 SDA AMENDMENTS 11 & 12
10 03/25/13 ADDENDUM NO. 2

DRAWING TITLE
STAIR PLANS & SECTIONS
STAIRWELL 3
STAIRWELL 4

DRAWING No.
A-5.1

DWG. NO. OF

Drawing name: P:\2012\2012-213.00 Marshall St Elementary - Restart\DRAWINGS\Condocs\A5_STAIRS\213-A5.1.dwg Plotted By: MFERRAGAMO Mar 25, 2013 - 6:11pm

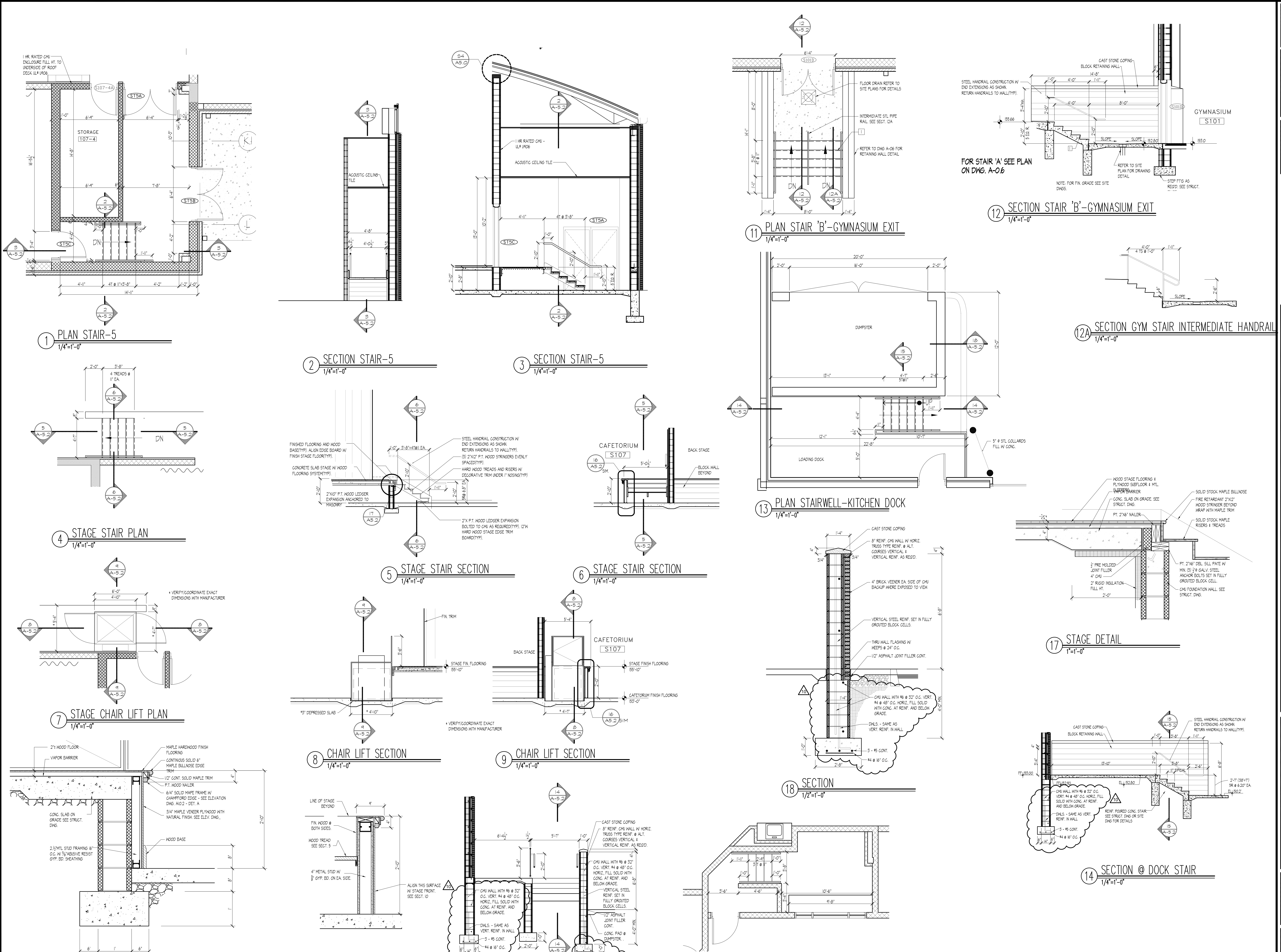

NOTE:
1 PROVIDE CAST-IN PLACE EXTRUDED NOSING AT ALL CONCRETE STAIRS (INTERIOR & EXTERIOR) RUN FULL WIDTH OF STAIR. SEE SPEC. SECTION 05500 FOR TYPE

NOTE:
ALL FRAMING LUMBER, WOOD DECKING & SHEATHING SHOULD BE FIRE RESISTANT

SDA
NJ SCHOOLS DEVELOPMENT AUTHORITY
STATE OF NEW JERSEY
ECONOMIC DEVELOPMENT AUTHORITY

DesignIdeasGroup
architecture + planning, llc
15 Bethany Street
New Brunswick, NJ 08901
T: 732.249.6242
F: 732.247.1825
60 West Broad Street
Bethlehem, PA 18018
T: 610.807.0420
F: 610.807.0602

Richard D. Alderiso, AIA
NJ RA AI 15023 NY RA 027416
Robert M. Iamello, AIA
NJ RA 08585 NY RA 018723 DE RA S5-0006594 NH RA 2813
Vincent A. Myers, AIA
NJ RA AI 11415
Joseph P. Tomaino, AIA PP
NJ RA C6086 NJ PP 2442 PA RA B6732 CT RA 9650
DC RA ARC100054 DE RA S5-0006679 MD RA 8887
VA RA 0401011785 VT RA 03-0001370
Jeffrey D. Venezia, AIA
NJ RA AI 08271 NY RA 023719-1
Warren W. Winter, AIA
NJ RA AI 06853 NY RA 010562-1

CONSTRUCTION PROGRAM FOR THE
MARSHALL STREET ELEMENTARY SCHOOL
DOE# 4010-N01-02-0169
NJSDA# PA-0006-C03
DCA# OLCEHPC-05--013 ERU# 6095-05
ADDRESS
NJ SDA
WEST STATE STREET
TRENTON, NEW JERSEY

JOB NO. 23110

ISSUED
05/15/09 ISSUED FOR BID
07/06/09 ISSUED FOR BID
1 08/06/09 DCA REVIEW COMMENTS
9 12/17/12 SDA AMENDMENTS 11 & 12
10 03/25/13 ADDENDUM NO. 2

DRAWING TITLE
STAIR PLANS & SECTIONS
STAIRWELL 5
STAGE, GYM AND KITCHEN

DRAWING No.
A-5.2
DWG. NO. OF

Drawing name: P:\2012\2012-213.00 Marshall St Elementary - Restart\DRAWINGS\Condocs\A5_STAIRS\213-A5.2.dwg Plotted By: MFERRAGAMO Mar 25, 2013 - 6:10pm

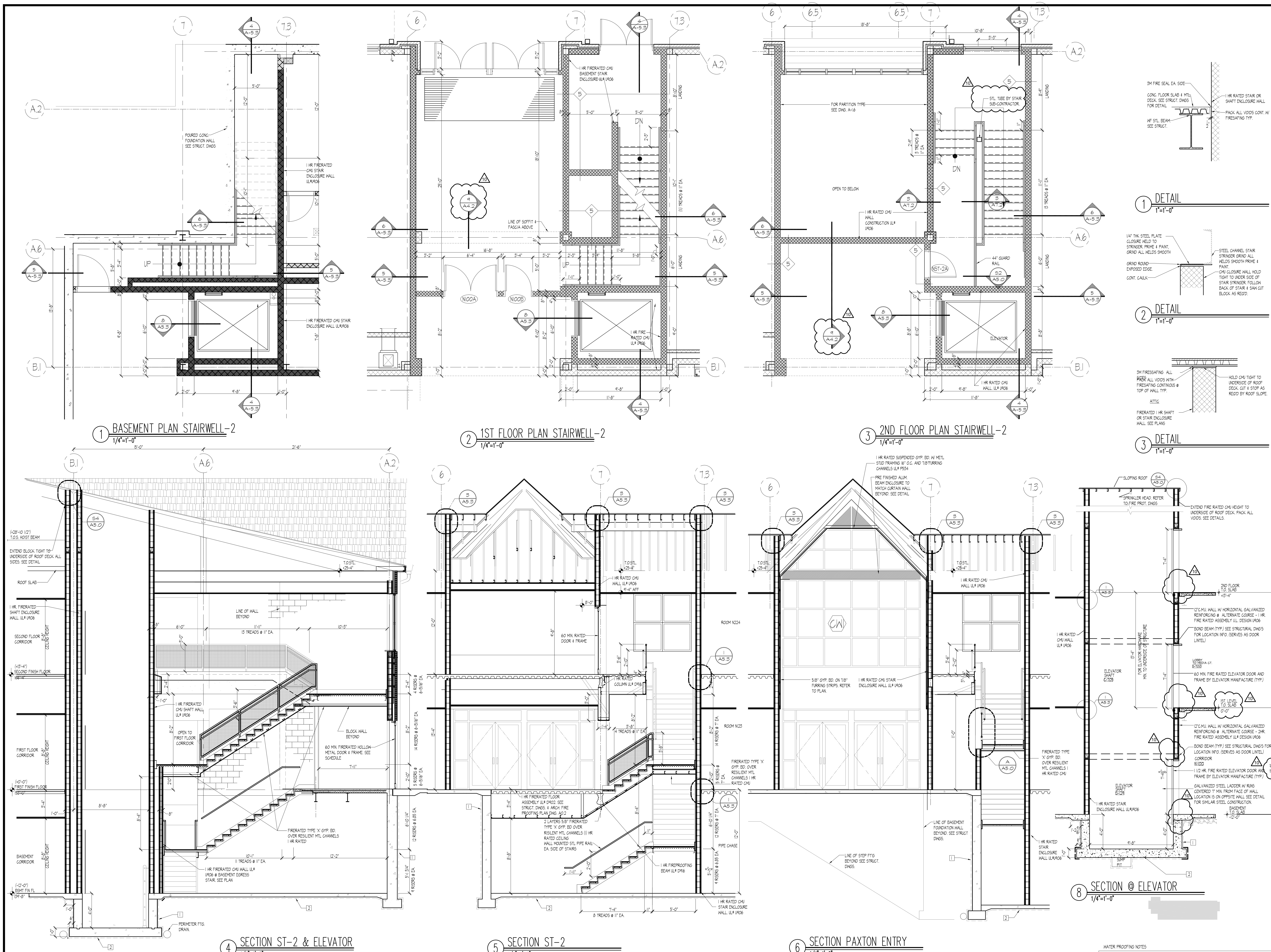

WATER PROOFING NOTES

NOTES:

1. COLD APPLIED, SPRAYED-ON WATERPROOFING SYSTEM FULL HEIGHT ON FOUNDATION WALL-TIE INTO SLAB SYSTEM
2. PRE-APPLIED INTERGRALLY BONDED SHEET MEMBRANE WATERPROOFING SYSTEM - TIE INTO FOUNDATION WALL SYSTEM

SDA

NJ SCHOOLS DEVELOPMENT AUTHORITY

STATE OF NEW JERSEY

ECONOMIC DEVELOPMENT AUTHORITY

DesignIdeasGroup
architecture + planning, llc

15 Bethany Street
New Brunswick, NJ 08901
T: 732.249.6242
F: 732.247.1825

60 West Broad Street
Bethlehem, PA 18018
T: 610.807.0420
F: 610.807.0602

Richard D. Alderiso, AIA
NJ RA AI 15023 NY RA 027416

Robert M. Iamello, AIA
NJ RA 08585 NY RA 018723 DE RA S5-0006594 NH RA 2813

Vincent A. Myers, AIA
NJ RA AI 11415

Joseph P. Tomaino, AIA PP
NJ RA C6086 NJ PP 2442 PA RA B6732 CT RA 9650
DC RA ARC100054 DE RA S5-0006679 MD RA 8887
VA RA 0401011785 VT RA 03-0001370

Jeffrey D. Venezia, AIA
NJ RA AI 08271 NY RA 023719-1

Warren W. Winter, AIA
NJ RA AI 06853 NY RA 010562-1

CONSTRUCTION PROGRAM FOR THE

MARSHALL STREET ELEMENTARY SCHOOL

DOE# 4010-N01-02-0169
NJSDA# PA-0006-C03
DCA# OLCEHPC-05--013 ERU# 6095-05

ADDRESS
NJ SDA
WEST STATE STREET
TRENTON, NEW JERSEY

JOB NO. 23110

ISSUED

05/15/09 ISSUED FOR BID
07/06/09 ISSUED FOR BID
△ 08/06/09 DCA REVIEW COMMENTS
9 12/17/12 SDA AMENDMENTS 11 & 12
10 03/25/13 ADDENDUM NO. 2

DRAWING TITLE

ENLARGED PLANS
VESTIBULE 1, LOBBY AREA
& STAIRWELL 2

DRAWING No.

A-5.3

DWG. NO. OF

DOOR SCHEDULE

ROOM NO.	ROOM NAME	DOOR NO.	DOOR SIZE W	DOOR SIZE H	DOOR SIZE THK.	DOOR MAT.	DOOR TYPE	FRAME MAT.	FRAME TYPE	DETAILS JAMB	DETAILS HEAD	DETAILS THRSH.	HDWR.	FIRE LABEL	GLASS	NOTES
BASEMENT FLOOR - NORTH WING																
B100	ELEVATOR EQUIPMENT ROOM	B100A	3'-6"	7'-0"	1 3/4"	HM	B	HM	1	J-2	H-5	–	SET 5	60 MIN.	–	
B101	STAFF ROOM	B101A	3'-0"	7'-0"	1 3/4"	SCW	C	HM	1	J-2	H-5		SET 3	45 MIN.		
B101-1	LOCKER ROOM	B101-1A	3'-0"	7'-0"	1 3/4"	SCW	B	HM	1	J-2	H-4	T3	SET 10			
B101-2	TOILET-LOCKERS	B101-2A	3'-0"	7'-0"	1 3/4"	SCW	B	HM	1	J-2	H-4		SET 3			
B102	GENERAL STORAGE	B102A	(2)3'-0"	7'-0"	1 3/4"	SCW	B	HM	3	J-2	H-5		SET 2	45 MIN.		
B103	TECHNICAL CLOSET	B103A	(2)3'-0"	7'-0"	1 3/4"	SCW	B	HM	3	J-2	H-5		SET 2	45 MIN.		
B104	MECHANICAL ROOM	B104A	(2)3'-0"	7'-0"	1 3/4"	SCW	B	HM	3	J-2	H-5		SET 25	45 MIN.		
B104	MECHANICAL ROOM	B104B	3'-0"	7'-0"	1 3/4"	HM	B	HM	1	J-2	H-5		SET 4	45 MIN.		
B105	ELECTRICAL ROOM	B105A	(2)3'-0"	7'-0"	1 3/4"	SCW	B	HM	3	J-2	H-5		SET 25	45 MIN.		
B105	ELECTRICAL ROOM	B105B	3'-8"	7'-0"	1 3/4"	SCW	B	HM	1	J-2	H-5		SET 4	45 MIN.		
B106	PUMP ROOM	B106A	(2)3'-0"	7'-0"	1 3/4"	SCW	B	HM	3	J-2	H-5		SET 25	45 MIN.		
B107	STORAGE	B107A	3'-0"	7'-0"	1 3/4"	HM	B	HM	1	J-2	H-5		SET 5	45 MIN.		
ST2	STAIRWELL 2	ST2A	3'-8"	7'-0"	1 3/4"	HM	D	HM	1	J-2	H-5		SET 1	60 MIN.	WG	
ST3	STAIRWELL 3	ST3A	3'-8"	7'-0"	1 3/4"	HM	D	HM	1	J-2	H-5		SET 1	60 MIN.	WG	
FIRST FLOOR - NORTH WING																
VB1	VESTIBULE 1	VB1A	(4)3'-0"	7'-0"	1 3/4"	AL	F	AL	AL-5	J-11	H-1		SET 7	–	SG	
VB1	VESTIBULE 1	VB1B	(4)3'-0"	7'-0"	1 3/4"	AL	F	AL	AL-5	J-11	H-1		SET 7	–	SG	
N101	SGI CLASSROOM	N101A	3'-0"	7'-0"	1 3/4"	SCW	A	HM	1	J-2	H-5		SET 9		SG	
N102	SGI CLASSROOM	N102A	3'-0"	7'-0"	1 3/4"	SCW	A	HM	1	J-2	H-5		SET 9		SG	
N103	2ND GRADE CLASSROOM	N103A	3'-0"	7'-0"	1 3/4"	SCW	A	HM	1	J-2	H-5		SET 9		SG	
N104	2ND GRADE CLASSROOM	N104A	3'-0"	7'-0"	1 3/4"	SCW	A	HM	1	J-2	H-5		SET 9		SG	
N105	2ND GRADE CLASSROOM	N105A	3'-0"	7'-0"	1 3/4"	SCW	A	HM	1	J-2	H-5		SET 9		SG	
N106	MEDIA CENTER	N106A	(2)3'-0"	7'-0"	1 3/4"	SCW	C	HM	3	J-2	H-5		SET 13	45 MIN.	WG	
N106	MEDIA CENTER	N106B	(2)3'-0"	7'-0"	1 3/4"	AL	F	AL	AL-1	J-11	H-1		SET 7		SG	
N106-1	STORAGE	N106-1A	3'-0"	7'-0"	1 3/4"	SCW	B	HM	1	J-1	H-10		SET 5	45 MIN.	–	
N106-2	MEDIA CENTER OFFICE	N106-2A	3'-0"	7'-0"	1 3/4"	SCW	C	HM	8A	J-1	H-10		SET 3		SG	
N106-3	TECH OFFICE	N106-3A	3'-0"	7'-0"	1 3/4"	SCW	C	HM	8	J-1	H-10		SET 3		SG	
N106-4	AV WORK ROOM	N106-4A	3'-0"	7'-0"	1 3/4"	SCW	C	HM	1	J-1	H-10		SET 5		SG	
N107	1ST GRADE CLASSROOM	N107A	3'-0"	7'-0"	1 3/4"	SCW	A	HM	1	J-2	H-5		SET 9		SG	
N108	1ST GRADE CLASSROOM	N108A	3'-0"	7'-0"	1 3/4"	SCW	A	HM	1	J-2	H-5		SET 9		SG	
N109	1ST GRADE CLASSROOM	N109A	3'-0"	7'-0"	1 3/4"	SCW	A	HM	1	J-2	H-5		SET 9		SG	
N110	1ST GRADE CLASSROOM	N110A	3'-0"	7'-0"	1 3/4"	SCW	A	HM	1	J-2	H-5		SET 9		SG	
N111	CUSTODIAN	N111A	3'-0"	7'-0"	1 3/4"	SCW	B	HM	1	J-2	H-5		SET 5	45 MIN.		
N112	ELECTRICAL ROOM	N112A	3'-0"	7'-0"	1 3/4"	SCW	B	HM	1	J-2	H-5		SET 5	45 MIN.		
N113	FACULTY TOILET	N113A	3'-0"	7'-0"	1 3/4"	SCW	B	HM	1	J-2	H-4		SET 10			
N114	SGI CLASSROOM	N114A	3'-0"	7'-0"	1 3/4"	SCW	A	HM	1	J-2	H-5		SET 9		SG	
N115	TECH CLOSET	N115A	(2)3'-0"	7'-0"	1 3/4"	SCW	B	HM	3	J-2	H-5		SET 11	90 MIN.	–	
N116	SPECIAL ED CLASSROOM	N116A	3'-0"	7'-0"	1 3/4"	SCW	A	HM	1	J-2	H-5		SET 9		SG	
N116-1	STORAGE	N116-1A	3'-0"	7'-0"	1 3/4"	SCW	B	HM	1	J-2	H-4		SET 5	45 MIN.	–	
N117	3RD GRADE CLASSROOM	N117A	3'-0"	7'-0"	1 3/4"	SCW	A	HM	1	J-2	H-5		SET 9		SG	
N118	3RD GRADE CLASSROOM	N118A	3'-0"	7'-0"	1 3/4"	SCW	A	HM	1	J-2	H-5		SET 9		SG	
N119	3RD GRADE CLASSROOM	N119A	3'-0"	7'-0"	1 3/4"	SCW	A	HM	1	J-2	H-5		SET 9		SG	
N120	4TH GRADE CLASSROOM	N120A	3'-0"	7'-0"	1 3/4"	SCW	A	HM	1	J-2	H-5		SET 9		SG	
N121	4TH GRADE CLASSROOM	N121A	3'-0"	7'-0"	1 3/4"	SCW	A	HM	1	J-2	H-5		SET 9		SG	
N122	4TH GRADE CLASSROOM	N122A	3'-0"	7'-0"	1 3/4"	SCW	A	HM	1	J-2	H-5		SET 9		SG	
N123	SPECIAL ED CLASSROOM	N123A	3'-0"	7'-0"	1 3/4"	SCW	A	HM	1	J-2	H-5		SET 9		SG	
ST1	STAIRWELL 1	STIA	3'-8"	7'-0"	1 3/4"	SCW	D	HM	1	J-2	H-5		SET 4	60 MIN.	WG	
ST1	STAIRWELL 1	STIB	(2)3'-0"	7'-0"	1 3/4"	AL	F	AL	AL-4	J-11	H-1		SET 6		SG	SEE CURTAIN WALL ELEVATIONS
ST2	STAIRWELL 2	ST2C	(2)3'-0"	7'-0"	1 3/4"	HM	D	HM	1	J-2	H-5		SET 7	60 MIN.	SG	
ST3	STAIRWELL 3	ST3B	3'-0"	7'-0"	1 3/4"	HM	D	HM	1	J-2	H-5		SET 4	60 MIN.	WG	
ST3	STAIRWELL 3	ST3C	(2)3'-0"	7'-0"	1 3/4"	AL	F	AL	AL-4	J-11	H-1		SET 6		SG	SEE CURTAIN WALL ELEVATIONS
ST3	STAIRWELL 3	ST3D	(2)3'-0"	7'-0"	1 3/4"	SCW	D	HM	3	J-2	H-5		SET 21	60 MIN.	WG	
N100A	STAIR No.2/CORRIDOR N-100	N100A	(2)3'-0"	7'-0"	1 3/4"	WD	A	HM	3	J-2	H-5		SET 7	60 MIN.	WG	
N100B	STAIR No.2/CORRIDOR N-100	N100B	3'-0"	7'-0"	1 3/4"	WD	A	HM	1	J-2	H-5		SET 19	60 MIN.	WG	
FIRST FLOOR - CENTRAL WING																
C100	CORRIDOR	C100A	(2)4'-0"	7'-0"	1 3/4"	SCW	D	HM	3A	J-12	H-9		SET 15		SG	DOUBLE EGRESS DOOR
C100	CORRIDOR	C100B	(2)3'-8"	7'-0"	1 3/4"	SCW	D	HM	3B	J-12	H-9		SET 15		SG	DOUBLE EGRESS DOOR
C101	BOY'S TOILET	C101A	3'-0"	7'-0"	1 3/4"	SCW	B	HM	1	J-2	H-5	T3	SET 14			
C102	HEALTH SUITE	C102A	3'-0"	7'-0"	1 3/4"	SCW	C	HM	4	J-2	H-5		SET 16		SG	
C102-2	TOILET	C102-2A	3'-0"	7'-0"	1 3/4"	SCW	B	HM	1	J-1	H-10	T3	SET 10			
C102-3	EXAM ROOM	C102-3A	3'-0"	7'-0"	1 3/4"	SCW	B	HM	1	J-1	H-10		SET 18			
C102-4	STORAGE	C102-4A	3'-0"	7'-0"	1 3/4"	SCW	B	HM	1	J-1	H-10		SET 5			
C103	GUIDANCE RECEPTION	C103A	3'-0"	7'-0"	1 3/4"	SCW	A	HM	1	J-2	H-5		SET 16		SG	
C103-1	FACILITATOR OFFICE	C103-1A	3'-0"	7'-0"	1 3/4"	SCW	A	HM	4	J-1	H-10		SET 18		SG	
C103-2	GUIDANCE	C103-2A	3'-0"	7'-0"	1 3/4"	SCW	A	HM	4	J-1	H-10		SET 16		SG	
C103-3	CST	C103-3A	3'-0"	7'-0"	1 3/4"	SCW	A	HM	4	J-1	H-10		SET 18		SG	
C103-4	CST	C103-4A	3'-0"	7'-0"	1 3/4"	SCW	A	HM	4	J-1	H-10		SET 18		SG	
C103-5	CST	C103-5A	3'-0"	7'-0"	1 3/4"	SCW	A	HM	4	J-1	H-10		SET 18		SG	
C103-6	STORAGE	C103-6A	3'-0"	7'-0"	1 3/4"	SCW	B	HM	1	J-1	H-10		SET 18	–	SG	
C104	SECURITY OFFICE	C104A	3'-0"	7'-0"	1 3/4"	SCW	C	HM	1	J-2	H-5		SET 16		SG	
C104-1	VIDEO STORAGE	C104-1A	3'-0"	7'-0"	1 3/4"	SCW	B	HM	1	J-1	H-10		SET 5			
C105	MAIN OFFICE	C105A	3'-0"	7'-0"	1 3/4"	SCW	C	HM	1	J-2	H-5		SET 16		SG	
C105-1	CONFERENCE ROOM	C105-1A	3'-0"	7'-0"	1 3/4"	SCW	A	HM	1	J-1	H-10		SET 18		SG	
C105-1	CONFERENCE ROOM	C105-1B	3'-0"	7'-0"	1 3/4"	SCW	A	HM	6	J-1	H-10		SET 18			
C105-3	CLOSET	C105-3A	3'-0"	7'-0"	1 3/4"	SCW	B	HM	1	J-1	H-10		SET 18			
C105-4	TOILET	C105-4A	3'-0"	7'-0"	1 3/4"	SCW	B	HM	1	J-1	H-10	T3	SET 10			
C105-5	TPR	C105-5A	3'-0"	7'-0"	1 3/4"	SCW	A	HM	1	J-1	H-10		SET 18		SG	
C105-6	CLOSET	C105-6A	3'-0"	7'-0"	1 3/4"	SCW	B	HM	1	J-1	H-10		SET 18			
C105-7	TPR	C105-7A	3'-0"	7'-0"	1 3/4"	SCW	A	HM	4	J-1	H-10		SET 18		SG	
C105-8	TPR	C105-8A	3'-0"	7'-0"	1 3/4"	SCW	A	HM	4	J-1	H-10		SET 18		SG	
C105-9	TPR	C105-9A	3'-0"	7'-0"	1 3/4"	SCW	A	HM	4	J-1	H-10		SET 18		SG	
C105-10	PRINCIPAL'S OFFICE	C105-10A	3'-0"	7'-0"	1 3/4"	SCW	A	HM	4	J-1	H-10		SET 18		SG	
C105-11	STORAGE	C105-11A	3'-0"	7'-0"	1 3/4"	SCW	B	HM	1	J-1	H-10		SET 18			
C105-12	CORRIDOR	C105-12A	3'-0"	7'-0"	1 3/4"	SCW	B	HM	1	J-2	H-5		SET 3			
C106	TECH CLOSET	C106A	3'-0"	7'-0"	1 3/4"	SCW	B	HM	1	J-2	H-5		SET 18	45 MIN.	–	
C107	SPEECH CLASSROOM	C107A	3'-0"	7'-0"	1 3/4"	SCW	A	HM	4	J-2	H-5		SET 16		SG	
C108	CLOSET	C108A	3'-0"	7'-0"	1 3/4"	SCW	B	HM	1	J-2	H-5		SET 18			
C109	COMMUNITY ROOM	C109A	3'-0"	7'-0"	1 3/4"	SCW	A	HM	4	J-2	H-5		SET 16		SG	
C109	COMMUNITY ROOM	C109B	3'-0"	7'-0"	1 3/4"	SCW	B	HM	1	J-2	H-5		SET 16			
C109-1	TOILET	C109-1A	3'-0"	7'-0"	1 3/4"	SCW	B	HM	1	J-1	H-10	T3	SET 10			
C110	STORAGE	C110A	3'-0"	7'-0"	1 3/4"	SCW	B	HM	1	J-2	H-5		SET 31	45 MIN.		
C111	KINDERGARTEN CLRM	C111A	3'-0"	7'-0"	1 3/4"	SCW	C	HM	1	J-2	H-5		SET 17		SG	
C111	KINDERGARTEN CLRM	C111B	3'-0"	7'-0"	1 3/4"	AL	F	AL	AL-3	J-11	H-1		SET 19		SG	SEE BUILDING ELEVATIONS
C111-1	TOILET	C111-1A	3'-0"	7'-0"	1 3/4"	SCW	B	HM	1	J-1	H-10	T3	SET 10			
C111-2	STORAGE	C111-2A	3'-0"	7'-0"	1 3/4"	SCW	B	HM	1	J-2	H-5		SET 5			
C112	KINDERGARTEN CLRM	C112A	3'-0"	7'-0"	1 3/4"	SCW	C	HM	1	J-2	H-5		SET 17		SG	
C112	KINDERGARTEN CLRM	C112B	3'-0"	7'-0"	1 3/4"	AL	F	AL	AL-3	J-11	H-1		SET 19		SG	SEE BUILDING ELEVATIONS
C112-1	TOILET	C112-1A	3'-0"	7'-0"	1 3/4"	SCW	B	HM	1	J-1	H-10	T3	SET 10			
C112-2	STORAGE	C112-2A	3'-0"	7'-0"	1 3/4"	SCW	B	HM	1	J-1	H-10		SET 5			
C113	KINDERGARTEN CLRM	C113A	3'-0"	7'-0"	1 3/4"	SCW	C	HM	1	J-2	H-5		SET 17		SG	
C113	KINDERGARTEN CLRM	C113B	3'-0"	7'-0"	1 3/4"	AL	F	AL	AL-3	J-11	H-1		SET 19		SG	SEE BUILDING ELEVATIONS
C113-1	TOILET	C113-1A	3'-0"	7'-0"	1 3/4"	SCW	B	HM	1	J-1	H-10	T3	SET 10			
C113-2	STORAGE	C113-2A	3'-0"	7'-0"	1 3/4"	SCW	B	HM	1	J-1	H-10		SET 5			
C114	KINDERGARTEN CLRM	C114A	3'-0"	7'-0"	1 3/4"	SCW	C	HM	1	J-2	H-5		SET 17		SG	
C114	KINDERGARTEN CLRM	C114B	3'-0"	7'-0"	1 3/4"	AL	F	AL	AL-3	J-11	H-1		SET 19		SG	SEE BUILDING ELEVATIONS
C114-1	TOILET	C114-1A	3'-0"	7'-0"	1 3/4"	SCW	B	HM	1	J-1	H-10	T3	SET 10			
C114-2	STORAGE	C114-2A	3'-0"	7'-0"	1 3/4"	SCW	B	HM	1	J-1	H-10		SET 5			
C115	GIRL'S TOILET	C115A	3'-0"	7'-0"	1 3/4"	SCW	B	HM	1	J-2	H-5	T3	SET 14			
VB2	VESTIBULE 2	VB2A	(4)3'-0"	7'-0"	1 3/4"	AL	F	AL	AL-6	J-11	H-1		SET 7		SG	SEE BUILDING ELEVATIONS
VB2	VESTIBULE 2	VB2B	(4)3'-0"	7'-0"	1 3/4"	AL	F	AL	AL-6	J-11	H-1		SET 7		SG	SEE BUILDING ELEVATIONS
VB2	VESTIBULE 2	VB2C	(4)3'-0"	7'-0"	1 3/4"	AL	F	AL	AL-7	J-11	H-1		SET 7		SG	SEE BUILDING ELEVATIONS
VB2	VESTIBULE 2	VB2D	(4)3'-0"	7'-0"	1 3/4"	AL	F	AL	AL-7	J-11	H-1		SET 7		SG	SEE BUILDING ELEVATIONS
VB3	VESTIBULE 3	VB3A	(4)3'-0"	7'-0"	1 3/4"	AL	F	AL	AL-2	J-11	H-1		SET 7		SG	SEE BUILDING ELEVATIONS
VB3	VESTIBULE 3	VB3B	(4)3'-0"	7'-0"	1 3/4"	AL	F	AL	AL-2	J-11	H-1		SET 7		SG	SEE BUILDING ELEVATIONS
VB3	VESTIBULE 3	VB3C	(2)3'-0"	7'-0"	1 3/4"	AL	F	AL	AL-4	J-11	H-1		SET 7		SG	SEE BUILDING ELEVATIONS
ST4	STAIRWELL 4	ST4A	3'-8"	7'-0"	1 3/4"	SCW	D	HM	1	J-3	H-8		SET 4	90 MIN.	WG	
ST4	STAIRWELL 4	ST4B	(2)3'-0"	7'-0"	1 3/4"	AL	F	AL	AL-1	J-11	H-1		SET 6	–	SG	SEE BUILDING ELEVATIONS

DOOR SCHEDULE ABBREVIATIONS:

AL	ALUMINUM
HDWR	HARDWARE
HM	HOLLOW METAL
SCW	SOLID CORE WOOD
SG	SAFETY GLASS
WG	WIRE GLASS

DOOR SCHEDULE

ROOM NO.	ROOM NAME	DOOR NO.	DOOR SIZE W	DOOR SIZE H	DOOR SIZE THK.	DOOR MAT.	DOOR TYPE	FRAME MAT.	FRAME TYPE	DETAILS JAMB	DETAILS HEAD	DETAILS THRSH.	HDWR.	FIRE LABEL	GLASS	NOTES
FIRST FLOOR - SOUTH WING																
S100	CORRIDOR	S100A	(2)4'-0"	7'-0"	1 3/4"	SCW	D	HM	3A	J-12	H-9		SET 15	90 MIN	WG	DOUBLE EGRESS DOOR
S100	CORRIDOR	S100B	(2)3'-0"	7'-0"	1 3/4"	AL	F	AL	AL-2	J-11	H-1		SET 7			
S100	CORRIDOR	S100C	(2)3'-0"	7'-0"	1 3/4"	AL	F	AL	AL-2	J-11	H-1		SET 7			
S101	GYMNASIUM	S101A	(2)3'-0"	7'-0"	1 3/4"	SCW	A	HM	3	J-2	H-7		SET 21	90 MIN	WG	
S101	GYMNASIUM	S101B	(2)3'-0"	7'-0"	1 3/4"	SCW	A	HM	3	J-2	H-7		SET 21		SG	
S101	GYMNASIUM	S101C	(2)3'-0"	7'-0"	1 3/4"	AL	A	AL	AL-4	J-11	H-1		SET 20		SG	
S101	GYMNASIUM	S101D	(2)3'-0"	7'-0"	1 3/4"	AL	A	AL	AL-4	J-11	H-1		SET 20		SG	
S101-1	TECH CLOSET	S101-1A	3'-0"	7'-0"	1 3/4"	SCW	B	HM	1	J-2	H-7		SET 3	45 MIN		
S101-2	STORAGE	S101-2A	(2)3'-0"	7'-0"	1 3/4"	SCW	B	HM	3	J-2	H-7		SET 2	45 MIN		
S102	GIRL'S LOCKERS	S102A	3'-0"	7'-0"	1 3/4"	SCW	B	HM	1	J-2	H-4		SET 3			
S102-1	OFFICE	S102-1A	3'-0"	7'-0"	1 3/4"	SCW	A	HM	1	J-2	H-4		SET 18		SG	
S102-2	TOILET	S102-2A	3'-0"	7'-0"	1 3/4"	SCW	B	HM	1	J-2	H-4	T3	SET 10			
S103	BOY'S LOCKERS	S103A	3'-0"	7'-0"	1 3/4"	SCW	B	HM	1	J-2	H-4		SET 3			
S103-1	OFFICE	S103-1A	3'-0"	7'-0"	1 3/4"	SCW	A	HM	1	J-2	H-4		SET 18		SG	
S103-2	TOILET	S103-2A	3'-0"	7'-0"	1 3/4"	SCW	B	HM	1	J-2	H-4	T3	SET 10			
S104	WOMEN'S TOILET	S104A	3'-0"	7'-0"	1 3/4"	SCW	B	HM	1	J-2	H-5	T3	SET 14			
S105	MEN'S TOILET	S105A	3'-0"	7'-0"	1 3/4"	SCW	B	HM	1	J-2	H-5	T3	SET 14			
S106	CUSTODIAN	S106A	3'-0"	7'-0"	1 3/4"	SCW	B	HM	1	J-2	H-5		SET 22			
S107	CAFETORIUM	S107A	(2)3'-0"	7'-0"	1 3/4"	SCW	A	HM	3	J-2	H-5		SET 25		SG	
S107	CAFETORIUM	S107B	(2)3'-0"	7'-0"	1 3/4"	SCW	A	HM	3	J-2	H-5		SET 25		SG	
S107-1	CONTROL ROOM	S107-1A	3'-0"	7'-0"	1 3/4"	SCW	A	HM	1	J-2	H-5		SET 24		SG	
S107-2	STORAGE	S107-2A	(2)3'-0"	7'-0"	1 3/4"	SCW	B	HM	3	J-2	H-5		SET 2	45 MIN		
S107-4	ELEC. ROOM	S107-4A	3'-0"	7'-0"	1 3/4"	SCW	B	HM	1	J-2	H-5		SET 26	45 MIN		
S108	FACULTY DINING	S108A	3'-0"	7'-0"	1 3/4"	SCW	A	HM	1	J-2	H-5		SET 23		SG	
S108-1	TOILET	S108-1A	3'-0"	7'-0"	1 3/4"	SCW	B	HM	1	J-2	H-5	T3	SET 10			
S109	KITCHEN	S109A	3'-0"	7'-0"	1 3/4"	HM	D	HM	1	J-5	H-12		SET 20A		SG	
S109	KITCHEN	S109B	(2)2'-8"	7'-0"	1 3/4"	SCW	D	HM	3C	J-2	H-5		SET 25		SG	
S109	KITCHEN	S109C	3'-0"	7'-0"	1 3/4"	SCW	D	HM	1	J-2	H-7		SET 23		SG	
S109	KITCHEN	S109D	8'-0"	8'-0"	2"	STL	G	STL								O-H DOOR, SEE DETAIL
S109-1	STAFF LOCKERS	S109-1A	3'-0"	7'-0"	1 3/4"	SCW	B	HM	1	J-2	H-5		SET 3			
S109-2	TOILET	S109-2A	3'-0"	7'-0"	1 3/4"	SCW	B	HM	1	J-2	H-5	T3	SET 10			
S109-3	SERVING	S109-3A	(2)3'-0"	7'-0"	1 3/4"	SCW	B	HM	3	J-2	H-7		SET 23			
S109-3	SERVING	S109-3B	(2)3'-0"	7'-0"	1 3/4"	SCW	B	HM	3	J-2	H-7		SET 23			
S109-4	STORAGE ROOM	S109-4A	3'-0"	7'-0"	1 3/4"	SCW	B	HM	1	J-2	H-5		SET 33	45 MIN		
S109-5	KITCHEN OFFICE	S109-5A	3'-0"	7'-0"	1 3/4"	SCW	C	HM	4	J-2	H-5		SET 23		SG	
S110	MUSIC ROOM	S110A	(2)3'-0"	7'-0"	1 3/4"	HM	D	HM	3	J-5	H-12		SET 24		SG	
S110	MUSIC ROOM	S110B	(2)3'-0"	7'-0"	1 3/4"	SCW	A	HM	1	J-2	H-5		SET 7		SG	
S110-1	INSTRUMENT STORAGE	NO DOOR														
S110-2	PRACTICE ROOM	S110-2A	3'-0"	7'-0"	1 3/4"	SCW	A	HM	1	J-2	H-5		SET 24			PROVIDE SOUND STRIPS ALL SIDES
S110-3	PRACTICE ROOM	S110-3A	3'-0"	7'-0"	1 3/4"	SCW	A	HM	1	J-2	H-5		SET 24			PROVIDE SOUND STRIPS ALL SIDES
ST5	STAIRWELL 5	ST5A	(2)3'-0"	7'-0"	1 3/4"	SCW	D	HM	3	J-2	H-5		SET 21	60 MIN	WG	
ST5	STAIRWELL 5	ST5B	(2)3'-0"	7'-0"	1 3/4"	HM	D	HM	3	J-5	H-11		SET 6	–	SG	
ST5	STAIRWELL 5	ST5C	3'-0"	7'-0"	1 3/4"	SCW	D	HM	1	J-2	H-7		SET 1	60 MIN	WG	
S107-5	STORAGE	S107-5A	3'-0"	7'-0"	1 3/4"	SCW	B	HM	1	J-2	H-5		SET 33	45 MIN		
SECOND FLOOR - NORTH WING																
N200-1	STORAGE	N201-1A	3'-0"	7'-0"	1 3/4"	SCW	B	HM	1	J-2	H-5		SET 31			
N201	SGI CLASSROOM	N201A	3'-0"	7'-0"	1 3/4"	SCW	A	HM	1	J-2	H-5		SET 28		SG	
N202	SGI CLASSROOM	N202A	3'-0"	7'-0"	1 3/4"	SCW	A	HM	1	J-2	H-5		SET 28		SG	
N203	8TH GRADE CLASSROOM	N203A	3'-0"	7'-0"	1 3/4"	SCW	A	HM	1	J-2	H-5		SET 28		SG	
N204	8TH GRADE CLASSROOM	N204A	3'-0"	7'-0"	1 3/4"	SCW	A	HM	1	J-2	H-5		SET 28		SG	
N205	COMPUTER TECHNOLOGY	N205A	3'-0"	7'-0"	1 3/4"	SCW	A	HM	1	J-2	H-5		SET 34		SG	
N205	COMPUTER TECHNOLOGY	N205B	3'-0"	7'-0"	1 3/4"	SCW	A	HM	1	J-2	H-5		SET 34		SG	
N205-1	STORAGE	N205-1A	3'-0"	7'-0"	1 3/4"	SCW	B	HM	1	J-2	H-5		SET 37			
N206	7TH GRADE CLASSROOM	N206A	3'-0"	7'-0"	1 3/4"	SCW	A	HM	1	J-2	H-5		SET 28		SG	
N207	7TH GRADE CLASSROOM	N207A	3'-0"	7'-0"	1 3/4"	SCW	A	HM	1	J-2	H-5		SET 28		SG	
N208	6TH GRADE CLASSROOM	N208A	3'-0"	7'-0"	1 3/4"	SCW	A	HM	1	J-2	H-5		SET 28		SG	
N209	6TH GRADE CLASSROOM	N209A	3'-0"	7'-0"	1 3/4"	SCW	A	HM	1	J-2	H-5		SET 28		SG	
N210	CUSTODIANS	N210A	3'-0"	7'-0"	1 3/4"	SCW	B	HM	1	J-2	H-5		SET 31	45 MIN		
N211	ELEC. ROOM	N211A	3'-0"	7'-0"	1 3/4"	SCW	B	HM	1	J-2	H-5		SET 31	45 MIN		
N212	FACULTY TOILET	N212A	3'-0"	7'-0"	1 3/4"	SCW	B	HM	1	J-2	H-5	T3	SET 30			
N213	TECH CLOSET	N213A	3'-0"	7'-0"	1 3/4"	SCW	B	HM	1	J-2	H-5		SET 31	45 MIN		
N214	STORAGE ROOM	N214A	3'-0"	7'-0"	1 3/4"	SCW	B	HM	1	J-2	H-5		SET 31	45 MIN		
N215	ASSIST. PRINCIPAL	N215A	3'-0"	7'-0"	1 3/4"	SCW	C	HM	1	J-2	H-5		SET 32		SG	
N216	SPECIAL ED CLASSROOM	N216A	3'-0"	7'-0"	1 3/4"	SCW	A	HM	1	J-2	H-5		SET 28		SG	
N216-1	STORAGE	N216-1A	3'-0"	7'-0"	1 3/4"	SCW	B	HM	1	J-2	H-5		SET 26			
N217	4TH & 5TH GRADE CLASSROOM	N217A	3'-0"	7'-0"	1 3/4"	SCW	A	HM	1	J-2	H-5		SET 28		SG	
N218	5TH GRADE CLASSROOM	N218A	3'-0"	7'-0"	1 3/4"	SCW	A	HM	1	J-2	H-5		SET 28		SG	
N219	SGI	N219A	3'-0"	7'-0"	1 3/4"	SCW	A	HM	1	J-2	H-5		SET 28		SG	
N220	SGI	N220A	3'-0"	7'-0"	1 3/4"	SCW	A	HM	1	J-2	H-5		SET 28		SG	
N221	5TH GRADE CLASSROOM	N221A	3'-0"	7'-0"	1 3/4"	SCW	A	HM	1	J-2	H-5		SET 28		SG	
N222	5TH GRADE CLASSROOM	N222A	3'-0"	7'-0"	1 3/4"	SCW	A	HM	1	J-2	H-5		SET 28		SG	
N223	5TH GRADE CLASSROOM	N223A	3'-0"	7'-0"	1 3/4"	SCW	A	HM	1	J-2	H-5		SET 28		SG	
N224	SPECIAL ED CLASSROOM	N224A	3'-0"	7'-0"	1 3/4"	SCW	A	HM	1	J-2	H-5		SET 28		SG	
ST1	STAIRWELL 1	ST1C	(1)3'-0"	7'-0"	1 3/4"	SCW	D	HM	1	J-2	H-5		SET 27	60 MIN	WG	
ST2	STAIRWELL 2	ST2C	3'-0"	7'-0"	1 3/4"	SCW	D	HM	1	J-2	H-7		SET 1	60 MIN	WG	
ST3	STAIRWELL 3	ST3E	(2)3'-0"	7'-0"	1 3/4"	SCW	D	HM	3	J-2	H-5		SET 27	60 MIN	WG	
SECOND FLOOR - CENTRAL WING																
C200	CORRIDOR	C200A	(2)4'-0"	7'-0"	1 3/4"	SCW	D	HM	3A	J-12	H-9		SET 15		SG	DOUBLE EGRESS DOOR
C200-1	CLOSET	C200.1A	3'-0"	7'-0"	1 3/4"	SCW	B	HM	1	J-2	H-5		SET 14			
C201	BOY'S TOILET	C201A	3'-0"	7'-0"	1 3/4"	SCW	B	HM	1	J-2	H-5	T3	SET 14			
C202	SCIENCE DEMO. LAB	C202A	3'-0"	7'-0"	1 3/4"	SCW	A	HM	1	J-2	H-5		SET 34		SG	
C202	SCIENCE DEMO. LAB	C202B	3'-0"	7'-0"	1 3/4"	SCW	A	HM	1	J-2	H-5		SET 34		SG	
C203	TEACHER WORKROOM	C203A	3'-0"	7'-0"	1 3/4"	SCW	A	HM	1	J-2	H-5		SET 28		SG	
C203-1	TOILET	C203-1A	3'-0"	7'-0"	1 3/4"	SCW	B	HM	1	J-2	H-5	T3	SET 30			
C203-2	STORAGE	C203-2A	3'-0"	7'-0"	1 3/4"	SCW	B	HM	1	J-2	H-5		SET 28	45 MIN		
C204-1	SCIENCE PREP	C204-1A	3'-0"	7'-0"	1 3/4"	SCW	A	HM	1	J-2	H-5		SET 28	45 MIN	SG	
C204-1	SCIENCE PREP	C204-1B	3'-0"	7'-0"	1 3/4"	SCW	A	HM	1	J-2	H-5		SET 28	45 MIN	SG	
C204	SCIENCE DEMO LAB	C204A	3'-0"	7'-0"	1 3/4"	SCW	A	HM	1	J-2	H-5		SET 34		SG	
C204	SCIENCE DEMO LAB	C204B	3'-0"	7'-0"	1 3/4"	SCW	A	HM	1	J-2	H-5		SET 34		SG	
C205	SPECIAL ED CLASSROOM	C205A	3'-4"	7'-0"	1 3/4"	SCW	A	HM	1	J-2	H-5		SET 28		SG	
C206	ART CLASSROOM	C206A	3'-0"	7'-0"	1 3/4"	SCW	A	HM	1	J-2	H-5		SET 34		SG	
C206-1	KILN	C206-1A	3'-0"	7'-0"	1 3/4"	SCW	B	HM	1	J-2	H-5		SET 33	45 MIN		
C206-2	STORAGE	C206-2A	3'-0"	7'-0"	1 3/4"	SCW	B	HM	1	J-2	H-5		SET 33	45 MIN		
C207	SCIENCE DEMO CLASSROOM	C207A	3'-0"	7'-0"	1 3/4"	SCW	A	HM	1	J-2	H-5		SET 34		SG	
C207	SCIENCE DEMO LAB	C207B	3'-0"	7'-0"	1 3/4"	SCW	A	HM	1	J-2	H-5		SET 34		SG	
C207-1	SCIENCE PREP	C207-1A	3'-0"	7'-0"	1 3/4"	SCW	B	HM	1	J-2	H-5		SET 33	45 MIN		
C208	TECH ED. CLASSROOM	C208A	3'-0"	7'-0"	1 3/4"	SCW	A	HM	1	J-2	H-5		SET 34		SG	
C208	TECH ED. CLASSROOM	C208B	3'-0"	7'-0"	1 3/4"	SCW	A	HM	1	J-2	H-5		SET 34		SG	
C208-1	STORAGE	C208-1A	3'-0"	7'-0"	1 3/4"	SCW	B	HM	1	J-2	H-5		SET 33	45 MIN		
C209	SGI CLASSROOM	C209A	3'-0"	7'-0"	1 3/4"	SCW	A	HM	1	J-2	H-5		SET 28		SG	
C210	GIRL'S TOILET	C210A	3'-0"	7'-0"	1 3/4"	SCW	B	HM	1	J-2	H-5	T3	SET 14			
ST4	STAIRWELL 4	ST4C	(2)3'-0"	7'-0"	1 3/4"	SCW	D	HM	3	J-2	H-5		SET 27	60 MIN	WG	
MECHANICAL CLOSETS																
M1 – M60	TYPICAL ALL MECHANICAL CLOSETS	M1A-M48A	3'-0"	7'-0"	1 3/4"	SCW	B	HM	1				SET 8	45 MIN		

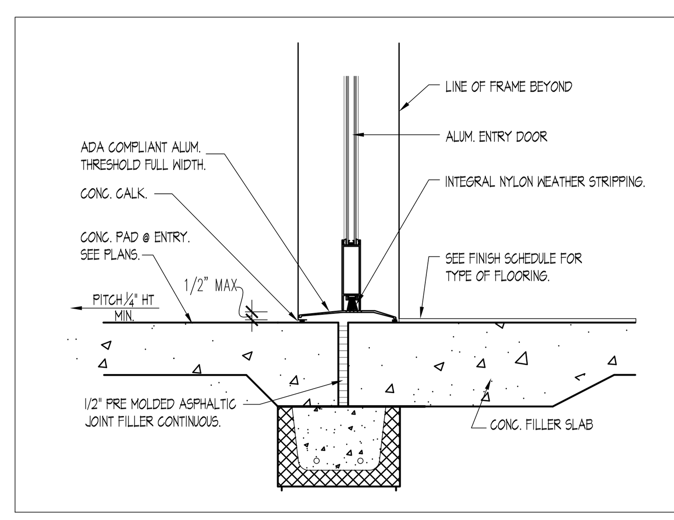

T.1 THRESHOLD DETAIL
1"=1'-0"

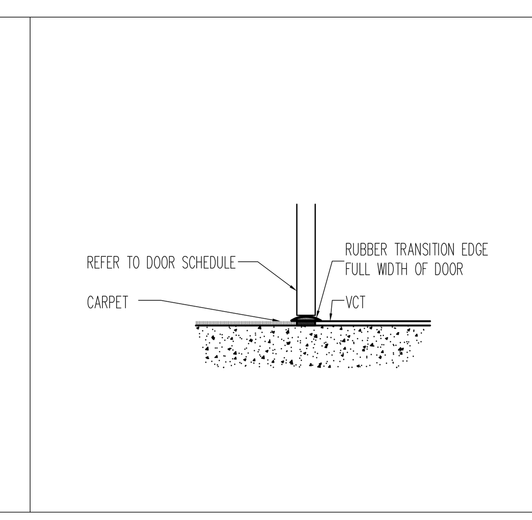

T.2 THRESHOLD DETAIL
1"=1'-0"

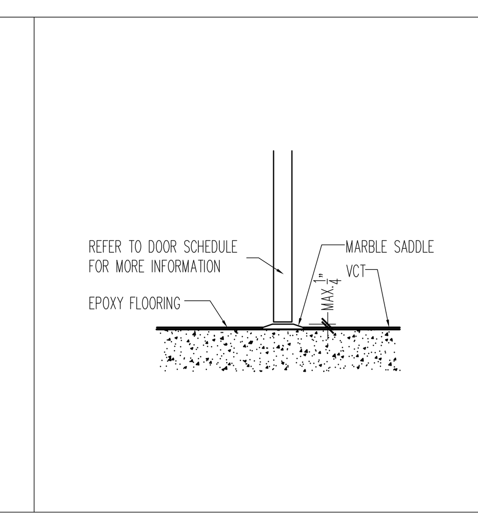

T.3 THRESHOLD DETAIL
1"=1'-0"

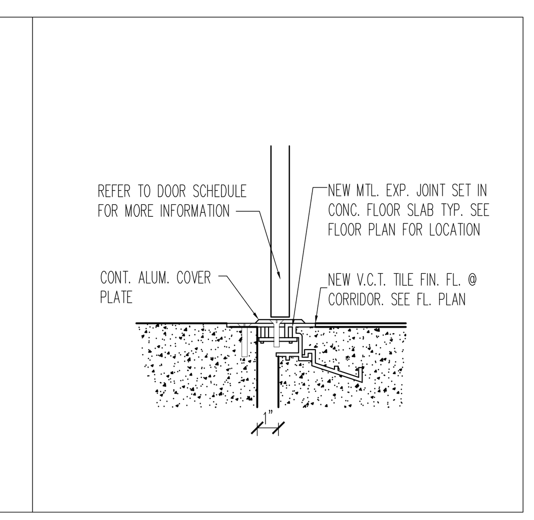

T.4 THRESHOLD DETAIL
1"=1'-0"

SDA
NJ SCHOOLS DEVELOPMENT AUTHORITY

STATE OF NEW JERSEY
ECONOMIC DEVELOPMENT AUTHORITY

DesignIdeasGroup
architecture + planning, llc
15 Bethany Street
New Brunswick, NJ 08901
T: 732.249.6242
F: 732.247.1825
142 West 36th Street
New York, NY 10018
T: 645.584.8419

Richard D. Alderiso, AIA
NJ RA AI 15023 NY RA 027416
Vincent A. Myers, AIA
NJ RA AI 11415
Jeffrey D. Venezia, AIA
NJ RA AI 08271 NY RA 023719-1
Warren W. Winter, AIA
NJ RA AI 06853 NY RA 010562-1

CONSTRUCTION PROGRAM FOR THE
MARSHALL STREET ELEMENTARY SCHOOL
DOE# 4010-N01-02-0169
NJSDA# PA-0006-C04
DCA# OLCEHPC-05--013 ERU# 6095-05
ADDRESS
NJSDA
1 WEST STATE STREET
TRENTON, NEW JERSEY

PROJECT NO.: 2012-213.00

ISSUED
05/15/09 ISSUED FOR BID
07/06/09 ISSUED FOR BID
1 08/06/09 DCA REVIEW COMMENTS
3 08/24/09 REVISED PER ADD. No. 3
4 05/05/10 DCA REVIEW COMMENTS
10 03/25/13 ADDENDUM NO. 2

DRAWING TITLE
DOOR SCHEDULE

DRAWING No.
A-6.2

DWG. NO. OF

Drawing name: P:\2012\2012-213.00 Marshall St Elementary - Restart\DRAWINGS\Condocs\A6_SCHEDULES\213-A6.2.dwg Plotted By: MFERRAGAMO Mar 25, 2013 - 6:14pm

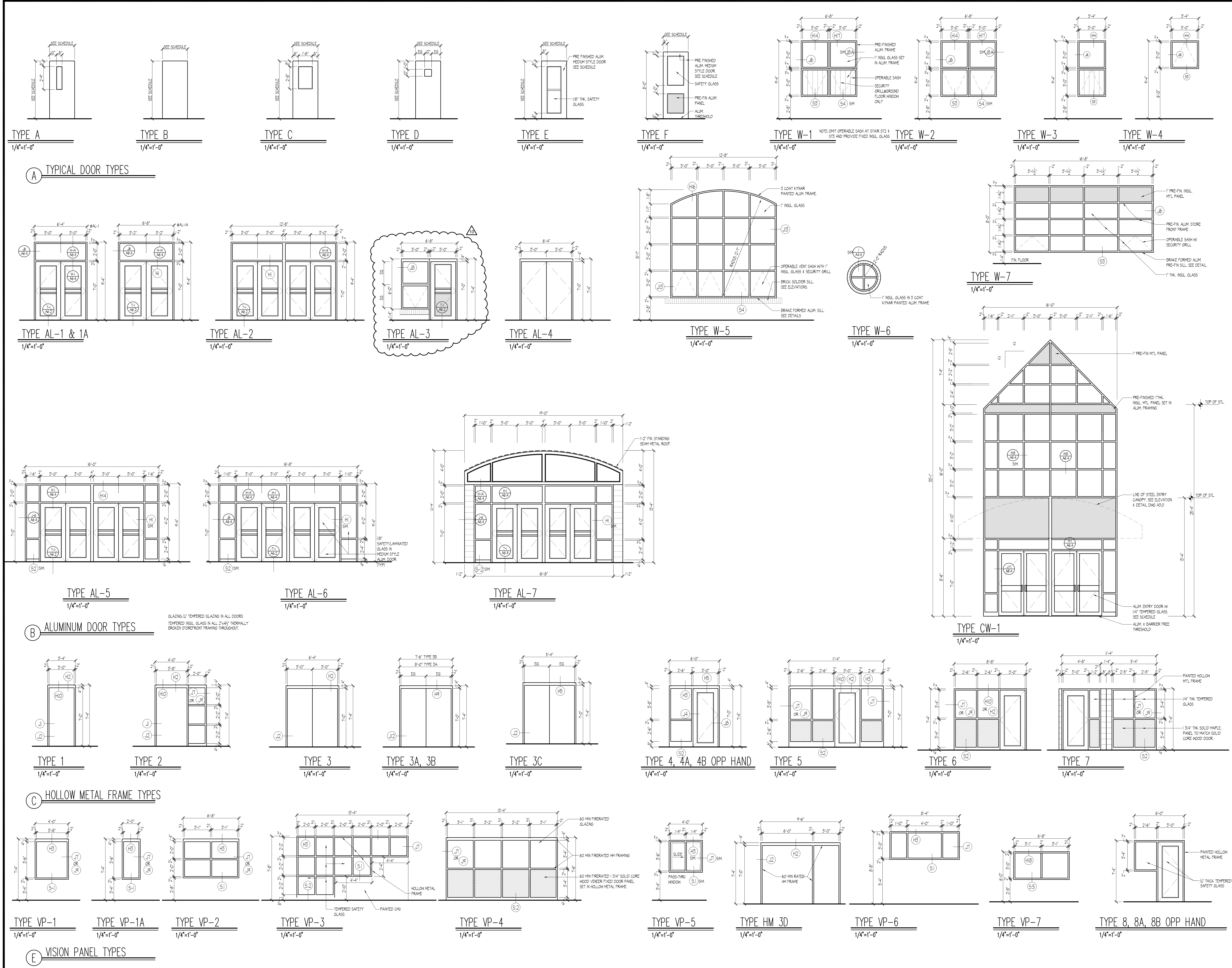

SDA

NJ SCHOOLS DEVELOPMENT AUTHORITY

STATE OF NEW JERSEY

ECONOMIC DEVELOPMENT AUTHORITY

DesignIdeasGroup architecture + planning, llc

15 Bethany Street
New Brunswick, NJ 08901
T: 732.249.6242
F: 732.247.1825

60 West Broad Street
Bethlehem, PA 18018
T: 610.807.0420
F: 610.807.0602

Richard D. Alderiso, AIA
NJ RA AI 15023 NY RA 027416

Robert M. Iamello, AIA
NJ RA 08585 NY RA 018723 DE RA S5-0006594 NH RA 2813

Vincent A. Myers, AIA
NJ RA AI 11415

Joseph P. Tomaino, AIA PP
NJ RA C6086 NJ PP 2442 PA RA B6732 CT RA 9650
DC RA ARC100054 DE RA S5-0006679 MD RA 8887
VA RA 0401011785 VT RA 03-0001370

Jeffrey D. Venezia, AIA
NJ RA AI 08271 NY RA 023719-1

Warren W. Winter, AIA
NJ RA AI 06853 NY RA 010562-1

CONSTRUCTION PROGRAM FOR THE

MARSHALL STREET ELEMENTARY SCHOOL

DOE# 4010-N01-02-0169
NJSDA# PA-0006-C03
DCA# OLCEHPC-05--013 ERU# 6095-05

ADDRESS
NJ SDA
WEST STATE STREET
TRENTON, NEW JERSEY

JOB NO. 23110

ISSUED
05/15/09 ISSUED FOR BID
07/06/09 ISSUED FOR BID
△ 08/06/09 DCA REVIEW COMMENTS
9 12/17/12 SDA AMENDMENTS 11 & 12
10 03/25/13 ADDENDUM NO. 2

DRAWING TITLE

DOOR AND VISION PANEL TYPES

DRAWING No.

A-6.3

DWG. NO. OF

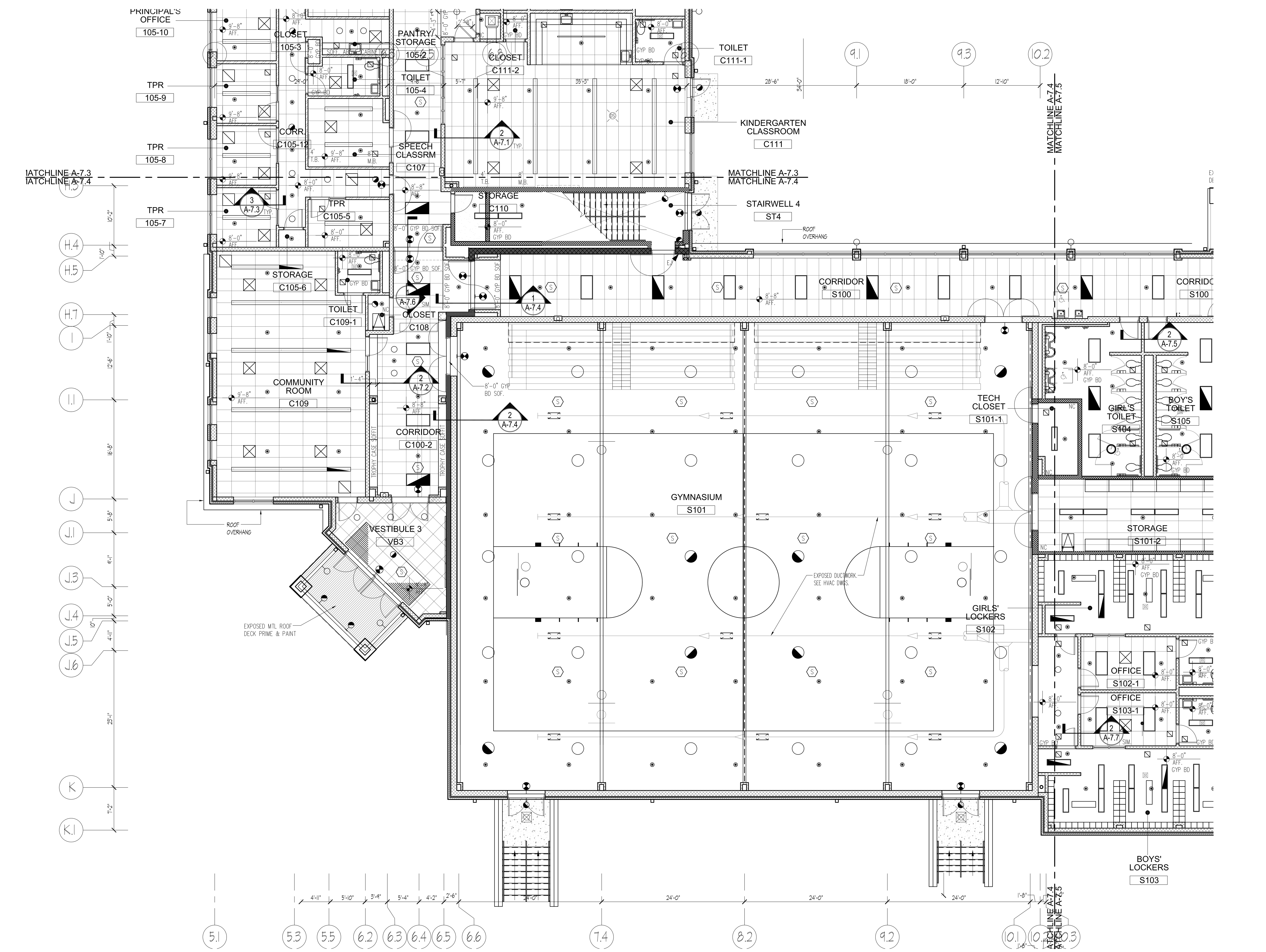

FIRST FLOOR CENTRAL & SOUTH WINGS REFLECTED CEILING PLAN

1/8"=1'-0"

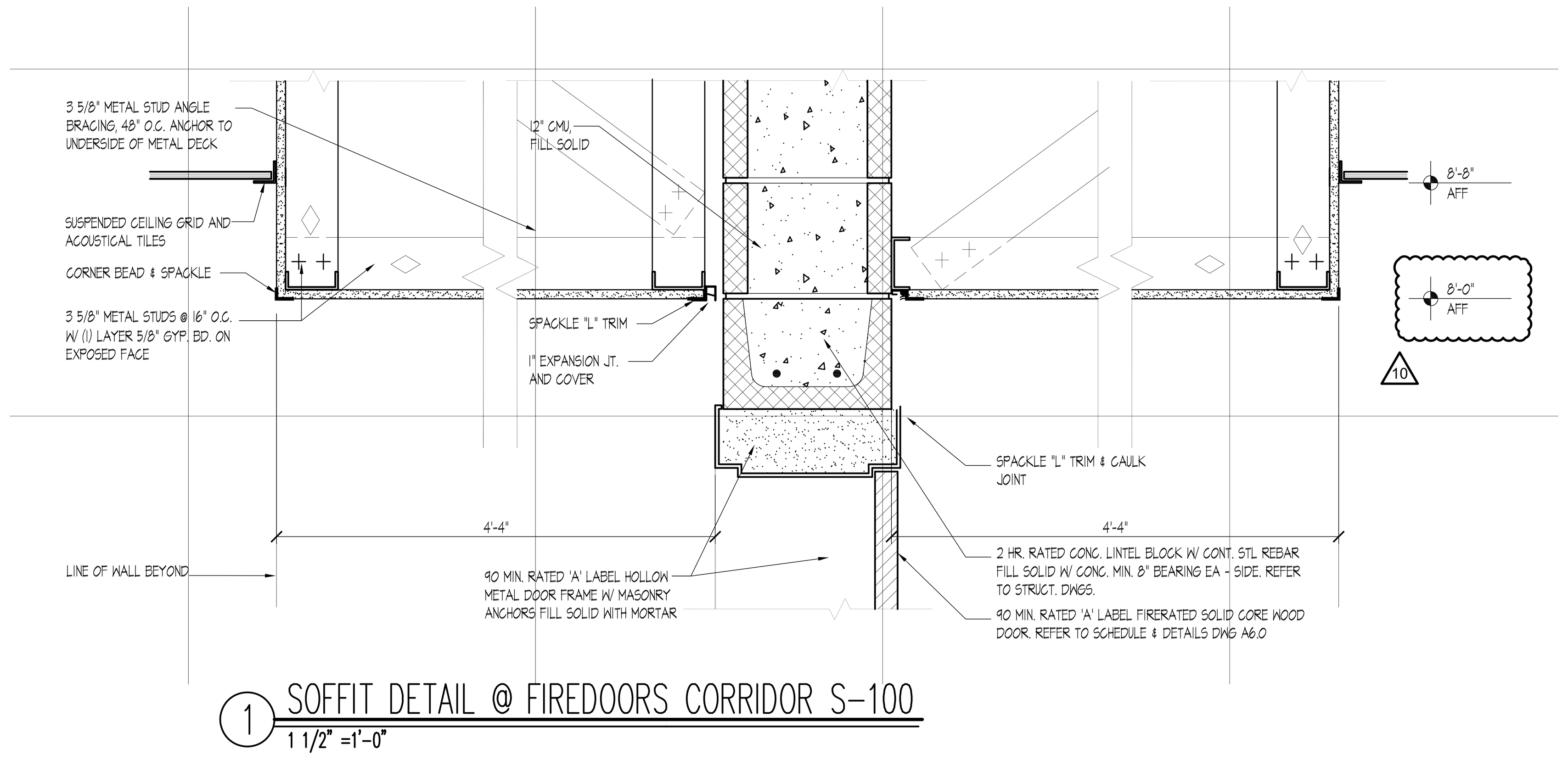

1 SOFFIT DETAIL @ FIREDOORS CORRIDOR S-100

1 1/2" =1'-0"

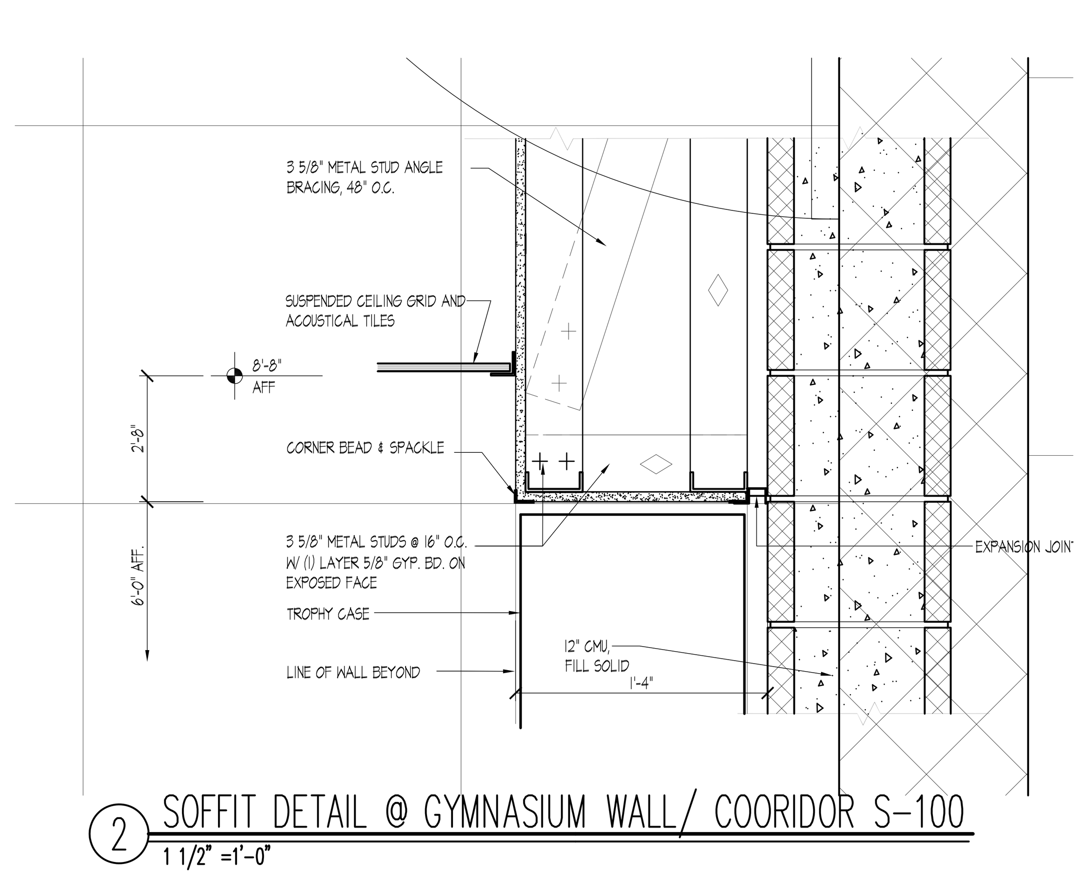

2 SOFFIT DETAIL @ GYMNASIUM WALL/ COORIDOR S-100

1 1/2" =1'-0"

REFLECTED CEILING PLAN LEGEND

EQ	EQUAL	GYP BD	GYPSUM BOARD
ACT	ACOUSTICAL CEILING TILE	N.C.	NO CEILING

FLUORESCENT LIGHT FIXTURE 2x4	PENDANT LIGHT FIXTURE	GYPSUM BOARD
FLUORESCENT LIGHT FIXTURE 2x2	PENDANT LIGHT FIXTURE	ACOUSTIC CEILING TILE 2x4
FLUORESCENT LIGHT FIXTURE 1x4	HVAC SUPPLY VENT	ACOUSTIC CEILING TILE 2x2
RECESSED LIGHT FIXTURE	HVAC RETURN VENT	ACOUSTIC CEILING TILE 1x1
WALL MOUNTED FIXTURE	SPRINKLER	EXPOSED METAL ROOF
RECESSED DIR. LIGHT FIXTURE	EXIT SIGN	GYPSUM BOARD SOFFIT/COVE
SURFACE MOUNTED LIGHT FIXTURE	CEILING PROFILE	CEILING HEIGHT
SPECIALTY LIGHT FIXTURE		
SPEAKER		

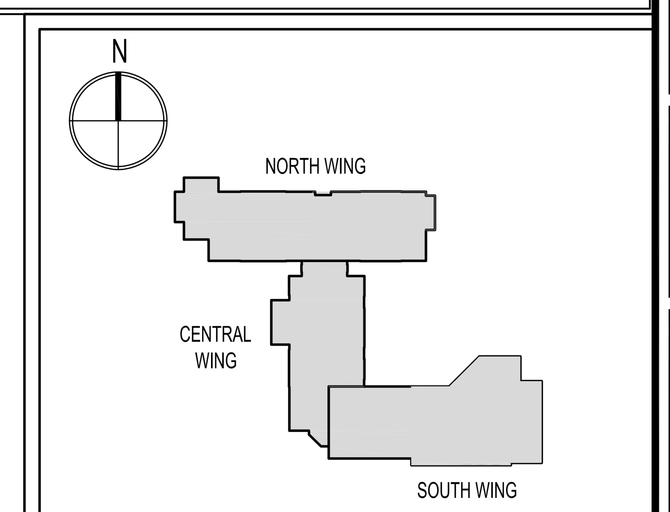

KEY PLAN N.T.S.

SDA

NJ SCHOOLS DEVELOPMENT AUTHORITY

STATE OF NEW JERSEY

ECONOMIC DEVELOPMENT AUTHORITY

DesignIdeasGroup
architecture + planning, llc

15 Bethany Street
New Brunswick, NJ 08901
T: 732.249.6242
F: 732.247.1825

142 West 36th Street
New York, NY 10018
T: 645.584.8419

Richard D. Alderiso, AIA
NJ RA AI 15023 NY RA 027416

Vincent A. Myers, AIA
NJ RA AI 11415

Jeffrey D. Venezia, AIA
NJ RA AI 08271 NY RA 023719-1

Warren W. Winter, AIA
NJ RA AI 06853 NY RA 010562-1

CONSTRUCTION PROGRAM FOR THE
MARSHALL STREET ELEMENTARY SCHOOL
DOE# 4010-N01-02-0169
NJSDA# PA-0006-C04
DCA# OLCEHPC-05--013 ERU# 6095-05

ADDRESS
NJSDA
1 WEST STATE STREET
TRENTON, NEW JERSEY

PROJECT NO.: 2012-213.00

ISSUED
05/15/09 ISSUED FOR BID
07/06/09 ISSUED FOR BID
1 08/06/09 DCA REVIEW COMMENTS
9 12/17/12 SDA AMENDMENTS 11 & 12
10 03/25/13 ADDENDUM NO. 2

DRAWING TITLE
FIRST FLOOR CENTRAL AND SOUTH WINGS REFLECTED CEILING PLAN

DRAWING No.
A-7.4

DWG. NO. OF

Drawing name: P:\2012\2012-213.00 Marshall St Elementary - Restart\DRAWINGS\Condocs\A7_REFLECTED CEILING PLANS\213-A7.4.dwg Plotted By: MFERRAGAMO Mar 25, 2013 - 6:13pm

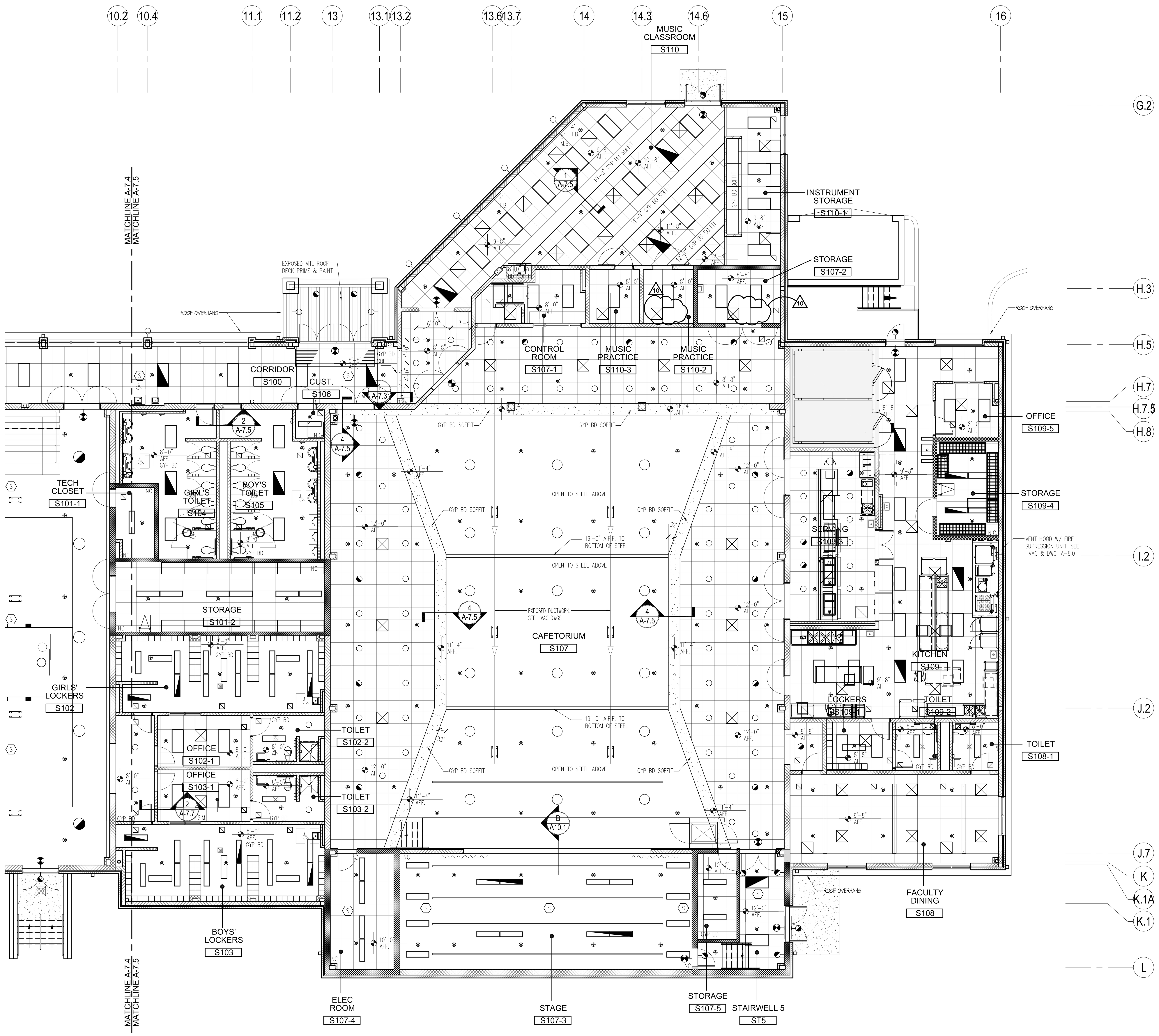

FIRST FLOOR SOUTH WING REFLECTED CEILING PLAN
1/8"=1'-0"

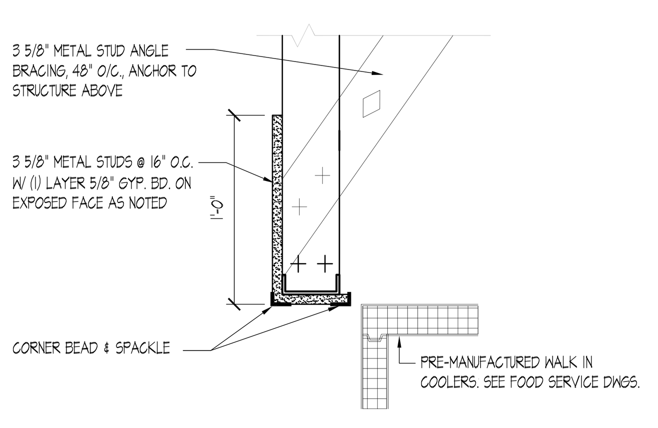

3 CEILING DETAIL @ FREEZER UNITS
1 1/2" =1'-0"

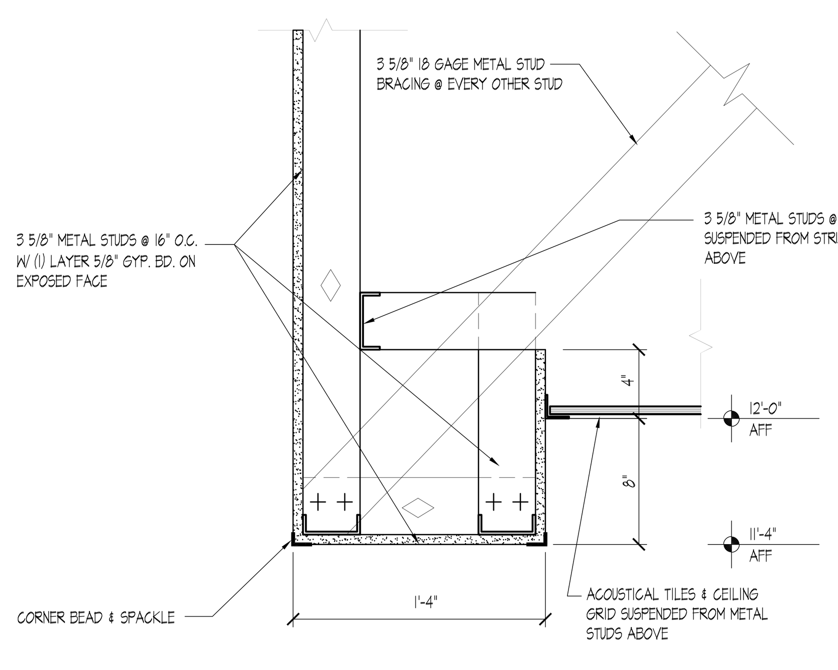

4 SOFFIT DETAIL @ CAFETORIUM
1 1/2" =1'-0"

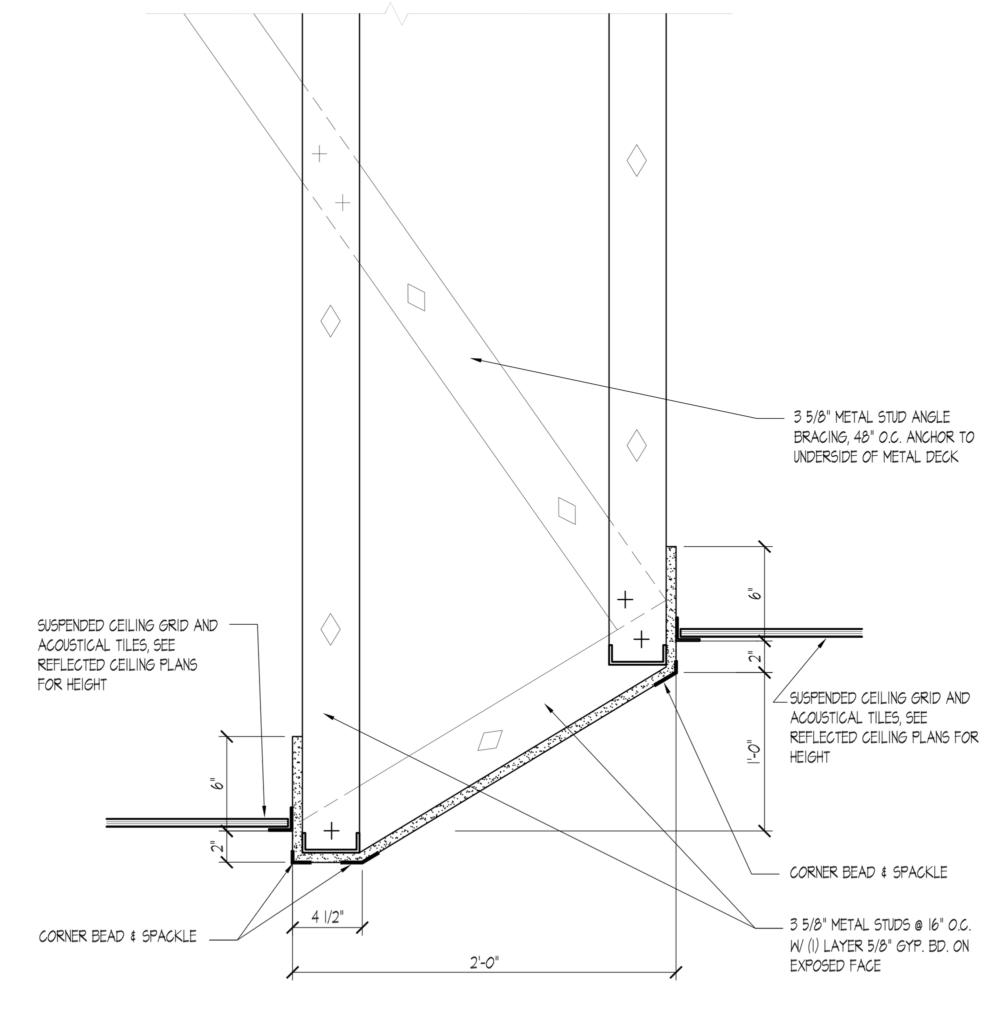

1 CEILING DETAIL @ MUSIC ROOM TRANSITION
1 1/2" =1'-0"

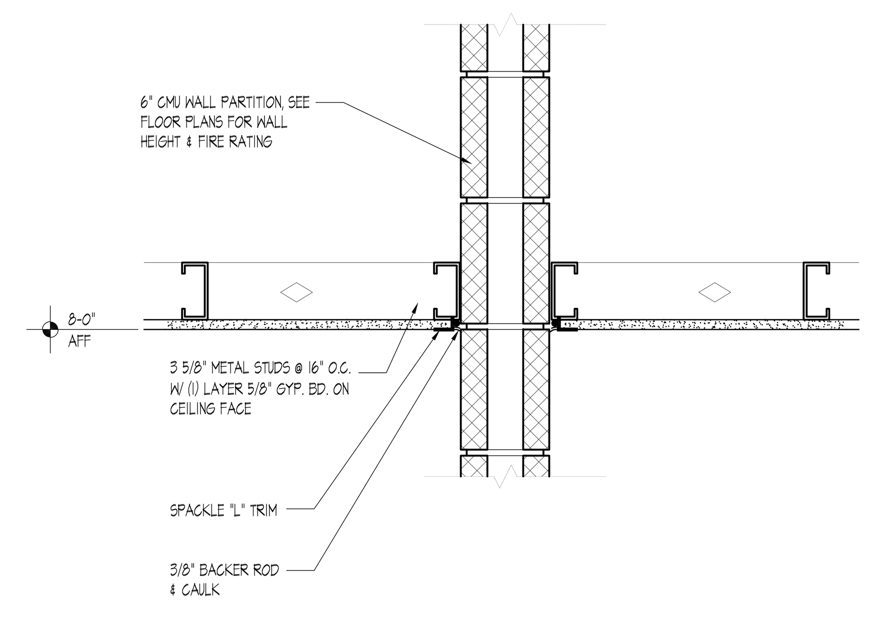

2 CEILING DETAIL @ 6" CMU WALL PARTTITION
1 1/2" =1'-0"

REFLECTED CEILING PLAN LEGEND

EQ	EQUAL	GYP BD	GYPSUM BOARD
ACT	ACOUSTICAL CEILING TILE	N.C.	NO CEILING

Symbol	Description	Symbol	Description	Symbol	Description
	FLUORESCENT LIGHT FIXTURE 2x4		PENDANT LIGHT FIXTURE		GYPSUM BOARD
	FLUORESCENT LIGHT FIXTURE 2x2		PENDANT LIGHT FIXTURE		ACOUSTIC CEILING TILE 2x4
	FLUORESCENT LIGHT FIXTURE 1x4		HVAC SUPPLY VENT		ACOUSTIC CEILING TILE 2x2
	RECESSED LIGHT FIXTURE		HVAC RETURN VENT		ACOUSTIC CEILING TILE 1x1
	WALL MOUNTED FIXTURE		SPRINKLER		EXPOSED METAL ROOF
	RECESSED DIR. LIGHT FIXTURE		EXIT SIGN		GYPSUM BOARD SOFFIT/COVE
	SURFACE MOUNTED LIGHT FIXTURE		CEILING PROFILE		CEILING HEIGHT
	SPECIALTY LIGHT FIXTURE				
	SPEAKER				

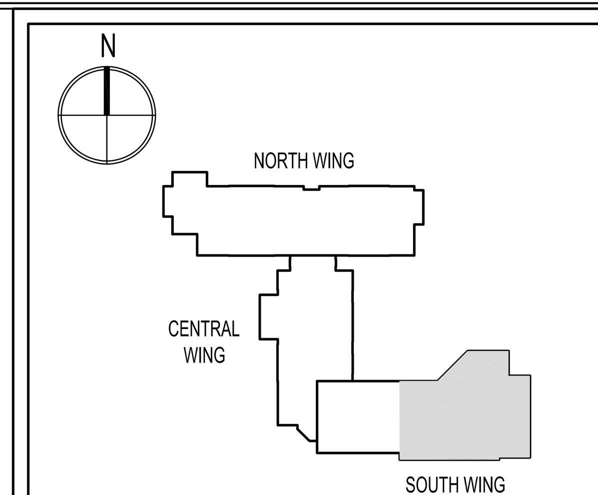

KEY PLAN N.T.S.

SDA
NJ SCHOOLS DEVELOPMENT AUTHORITY
STATE OF NEW JERSEY
ECONOMIC DEVELOPMENT AUTHORITY

DesignIdeasGroup architecture+planning,llc
15 Bethany Street New Brunswick, NJ 08901 T: 732.249.6242 F: 732.247.1825
142 West 36th Street New York, NY 10018 T: 645.584.8419

Richard D. Alderiso, AIA NJ RA AI 15023 NY RA 027416
Vincent A. Myers, AIA NJ RA AI 11415
Jeffrey D. Venezia, AIA NJ RA AI 08271 NY RA 023719-1
Warren W. Winter, AIA NJ RA AI 06853 NY RA 010562-1

CONSTRUCTION PROGRAM FOR THE
MARSHALL STREET ELEMENTARY SCHOOL
DOE# 4010-N01-02-0169
NJSDA# PA-0006-C04
DCA# OLCEHPC-05--013 ERU# 6095-05
ADDRESS
NJSDA
1 WEST STATE STREET
TRENTON, NEW JERSEY

PROJECT NO.: 2012-213.00

ISSUED
05/15/09 ISSUED FOR BID
07/06/09 ISSUED FOR BID
1 08/06/09 DCA REVIEW COMMENTS
9 12/17/12 SDA AMENDMENTS 11 & 12
10 03/25/13 ADDENDUM NO. 2

DRAWING TITLE
FIRST FLOOR SOUTH WING REFLECTED CEILING PLAN

DRAWING No.
A-7.5

DWG. NO. OF

Drawing name: P:\2012\2012-213.00 Marshall St Elementary - Restart\DRAWINGS\Condocs\A7_REFLECTED CEILING PLANS\213-A7.5.dwg Plotted By: MFERRAGAMO Mar 25, 2013 - 6:14pm

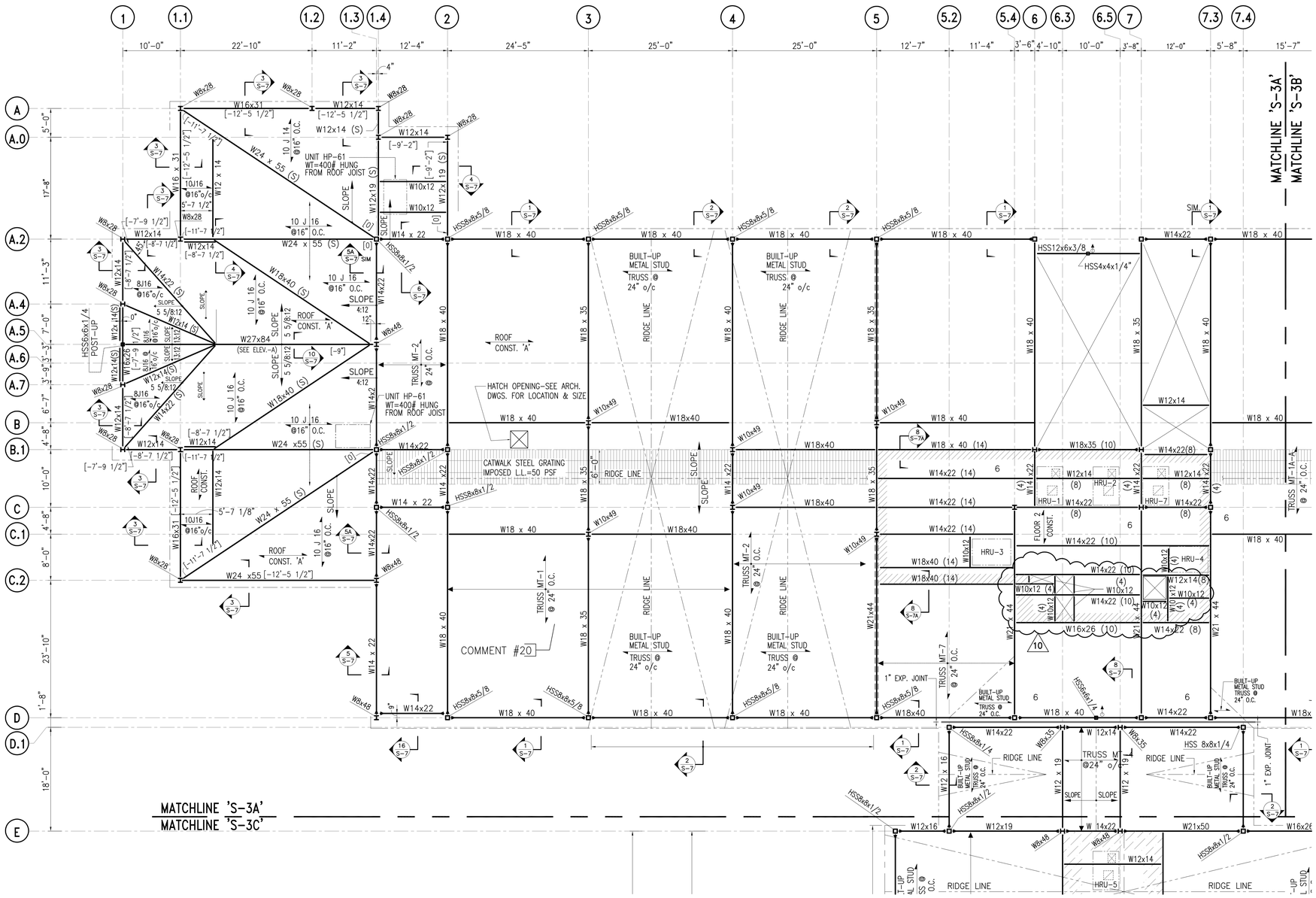

ROOF FRAMING PLAN (NORTH WING)

SCALE: 1/8" = 1'-0" TOP OF STEEL ELEV. 25'-4"

NOTES

1. FLOOR CONST. 2 = 3 1/2" L. W. T. CONC. SLAB W/ #4@12" o/c EACH WAY. ON 2" LOK-FLOOR, 22 GAGE, GALVANIZED METAL FLOOR DECK BY UNITED STEEL DECK, INC. OR APPROVED EQUAL (2 SPANS MINIMUM). U.L. DESIGN D902.
2. ROOF CONST. TYPE 'A' = 5/8" APA STRUCTURAL-I, FIRE RETARTED PLYWOOD SHEATHING.
3. UNLESS NOTED OTHERWISE, TOP OF ALL STEEL SHALL BE AT ELEVATION 25'-4" MEASURED FROM ASSUMED FINISHED FIRST FLOOR ELEVATION OF 0'-00"
4. [±--] INDICATES TOP OF STEEL ELEVATION MEASURED FROM ELEVATION 25'-4"
5. (S) INDICATES SLOPING BEAM.
6. ► INDICATES MOMENT CONNECTION BETWEEN COLUMN AND BEAM OF 30 FT-KIPS U.NO.
7. FOR ROOF TRUSSES SEE DWG. S-8A.
8. INDICATES POST DOWN.
9. INDICATES POST UP.
10. — — — INDICATES '10J14' BRIDGING JOIST.

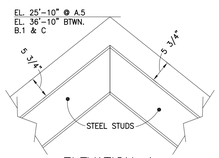

ELEVATION-A

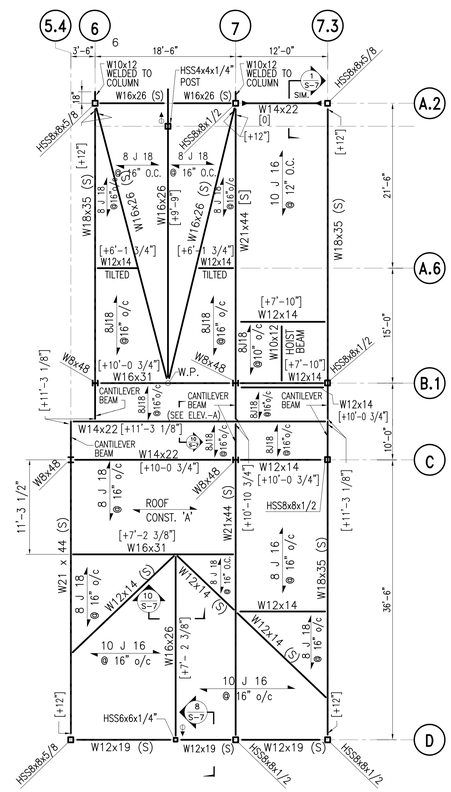

UPPER ROOF FRAMING PLAN

SCALE: 1/8" = 1'-0"

NOTES

1. LIGHT-GAGE STEEL ROOF JOIST BY STUD CONTRACTOR.

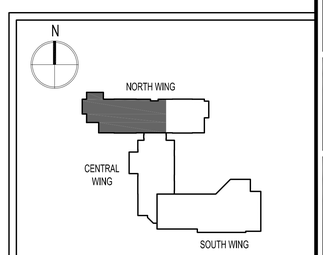

KEY PLAN N.T.S.

SDA
NJ SCHOOLS DEVELOPMENT AUTHORITY

STATE OF NEW JERSEY
ECONOMIC DEVELOPMENT AUTHORITY

DesignIdeasGroup
architecture + planning, llc
15 Bethany Street
New Brunswick, NJ 08901
T: 732.249.6242
F: 732.247.1825
142 West 36th Street
New York, NY 10018
T: 645.584.8419

Richard D. Alderiso, AIA
NJ RA AI 15023 NY RA 027416

Vincent A. Myers, AIA
NJ RA AI 11415

Jeffrey D. Venezia, AIA
NJ RA AI 08271 NY RA 023719-1

Warren W. Winter, AIA
NJ RA AI 06853 NY RA 010562-1

OTHER CONSULTANTS

M. JEFF LING N.J.P.E. # 31744

CEC INC.
CONSULTING ENGINEERS COLLABORATIVE, INC.
730 BOULEVARD KENILWORTH, NJ 07033
PHONE 908-298-1600 FAX 908-298-0702
CEC # 03100

CONSTRUCTION PROGRAM FOR THE
MARSHALL STREET ELEMENTARY SCHOOL
DOE# 4010-N01-02-0169
NJSDA# PA-0006-C04
DCA# OLCEHPC-05-013 ERU# 6095-05
ADDRESS
NJSDA
1 WEST STATE STREET
TRENTON, NEW JERSEY

PROJECT NO.: 2012-213.00

ISSUED

05/15/09 ISSUED FOR BID
07/06/09 ISSUED FOR BID
1 08/06/09 DCA REVIEW COMMENTS
2 09/01/09 ADD #4
3 12/09/09 DCA RESUBMISSION
4 12/23/09 AS NOTED
5 01/25/10 BULLETIN #1 REVISED
6 03/08/10 AS NOTED
12/17/12 SDA AMENDMENTS 11 & 12
10 03/25/13 ADDENDUM #2

DRAWING TITLE

ROOF FRAMING PLAN (NORTH WING)

DRAWING No.

S-3A

DWG. NO. OF

GENERAL ELECTRICAL NOTES:

1. ALL 125 VOLT, SINGLE-PHASE, 15 AND 20 AMP RECEPTACLES, WHEN INSTALLED IN KITCHENS OR IN OUTDOOR LOCATIONS WHERE THERE IS DIRECT ACCESS, SHALL HAVE GROUND-FAULT CIRCUIT INTERRUPTER PROTECTION. THIS SHALL APPLY, BUT NOT BE LIMITED TO, ALL OUTLETS IN KITCHENS, ON THE EXTERIOR OF BUILDING AND ROOF.
2. ALL 125 VOLT, SINGLE-PHASE, 15 AND 20 AMP RECEPTACLES, WHEN INSTALLED WITHIN A SIX FOOT RADIUS OF SINKS, SHALL HAVE GROUND-FAULT CIRCUIT INTERRUPTER PROTECTION. THIS SHALL APPLY, BUT NOT BE LIMITED TO, CLASSROOMS, ART ROOMS, LAVATORIES, AND OTHER WET AREAS.
3. ALL WORK SHALL BE PERFORMED IN ACCORDANCE WITH THE 2002 EDITION OF THE NATIONAL ELECTRICAL CODE (NEC), THE SPECIFICATION, AND THE AUTHORITY HAVING JURISDICTION.
4. ALL CIRCUIT BREAKERS SERVING HVAC EQUIPMENT SHALL BE UL LISTED AS 'HACR'.
5. THE DRAWINGS ARE DIAGRAMMATIC. EXACT LOCATION OF EQUIPMENT, WIRING AND RACEWAYS SHALL BE DETERMINED BY CONTRACTOR SUBJECT TO ARCHITECT APPROVAL.
6. THE CONTRACTOR SHALL BE RESPONSIBLE FOR VERIFYING THE ELECTRICAL CHARACTERISTICS OF ALL NEW EQUIPMENT, MOTORS, ETC. BEFORE INSTALLING CABLING AND RACEWAY. IF THERE ARE ANY DISCREPANCIES BETWEEN THE ACTUAL RATING OF EQUIPMENT AT THE SITE AND THE DRAWINGS, THEN THE ENGINEER SHALL BE NOTIFIED. SEE NOTE 18.
7. THE CONTRACTOR SHALL COORDINATE WITH THE ARCHITECT AND UTILITY COMPANY THE LOCATION OF ALL OUTDOOR LIGHTING FIXTURES, WIRING DEVICES, TRANSFORMERS, PAD MOUNTED SWITCHES, DISCONNECT SWITCHES, PANELBOARDS AND OTHER EQUIPMENT LOCATED OUTSIDE.
8. ALL EMPTY CONDUITS SHALL HAVE A PULL STRING INSTALLED.
9. THE CONTRACTOR SHALL COORDINATE HIS WORK WITH THE WORK OF THE MECHANICAL CONTRACTOR, STRUCTURAL CONTRACTOR, SITE CONTRACTOR, UTILITY COMPANY, OWNER PERSONNEL, AND ALL OTHER CONTRACTORS ON SITE, IN ACCORDANCE WITH THE REQUIREMENTS OF THE CONTRACT.
10. ALL PANELS, WIRING DEVICES, BOXES, AND ENCLOSURES LOCATED OUTDOORS SHALL BE NEMA 3R. ALL PANELS, WIRING DEVICES, BOXES, AND ENCLOSURES LOCATED INDOORS SHALL BE NEMA 1.
11. ALL FUSES IN DISCONNECT SWITCHES SHOWN SHALL BE CLASS RK-1, FAST ACTING, UNLESS RECOMMENDED OTHERWISE BY THE EQUIPMENT SUPPLIER/MANUFACTURER.
12. ALL KEY OPERATED SWITCHES SHALL BE KEYED ALIKE.
13. CONTRACTOR TO PROVIDE AND INSTALL ALL PHOTOCELLS AND TIME CLOCKS FOR OUTDOOR LIGHTING. LOCATE PHOTOCELLS FOR PROPER OPERATION. GENERAL SITE LIGHTING SHALL BE CONNECTED FOR PHOTO CELL-ON, TIME CLOCK OFF OPERATION. SITE SECURITY LIGHTING SHALL BE CONNECTED PHOTOCELL-ON AND TIME CLOCK OFF.
14. THE ELECTRICAL CONTRACTOR TO PROVIDE MOUNTING SUPPORTS FOR ALL DISCONNECT SWITCHES MOUNTED ON ROOF. USE P1000 UNISTRUT FOR ALL INDOOR SUPPORTS AND GALVANIZED P1000 UNISTRUT FOR ALL OUTDOOR SUPPORTS.
15. CONTRACTOR SHALL REFER TO ARCHITECTURAL DRAWINGS ("A" SERIES), FOR EXACT LOCATIONS OF WALLS, TYPE OF CEILINGS, FURNITURE, CASEWORK, DOOR SWINGS, ETC., AND IS RESPONSIBLE FOR DETERMINING THE EXACT LOCATIONS OF ELECTRICAL EQUIPMENT, SUBJECT TO ARCHITECT'S APPROVAL.
16. ALL RACEWAYS PENETRATING FIRE RATED PARTITIONS, WALLS, AND CEILINGS SHALL BE SEALED USING APPROVED FIRE RATED SEALANT TO MATCH THE REQUIRED WALL FIRE RATING.
17. PROVIDE ALL WIRING, RACEWAY AND BACKBOXES FOR (20) ADDITIONAL SMOKE DETECTORS, (20) HORN/STROBE UNITS, (10) STROBES, (10) DUCT MOUNTED SMOKE DETECTORS, (10) CONTROL MODULES, AND (10) PULL STATIONS. WHEN AND IF REQUIRED, CONNECT DEVICES INTO LOCAL ZONING AS REQUIRED BY LOCAL AUTHORITY HAVING JURISDICTION.
18. THE ELECTRICAL CONTRACTOR SHALL SECURE FROM OTHER CONTRACTORS ON THE PROJECT: SHOP DRAWINGS TO VERIFY CHARACTERISTICS OF ALL EQUIPMENT TO BE WIRED. IF THE CONTRACTOR FINDS DISCREPANCIES BETWEEN THE SHOP DRAWINGS AND THE ELECTRICAL PLANS, THE ELECTRICAL CONTRACTOR SHALL NOTIFY THE ENGINEER PROMPTLY. THE CONTRACTOR SHALL BE RESPONSIBLE FOR CORRECTIONS TO THE ELECTRICAL INSTALLATION IF THE DRAWING REVIEW IS NOT COMPLETED BY THE CONTRACTOR.
19. PANELBOARD CIRCUIT DIRECTORY: SHALL BE TYPED AND INDICATE INSTALLED CIRCUIT LOADS, SUCH AS: RECEPTACLES ROOM 101, 102, 103, ETC. AFTER BALANCING PANEL BOARD LOADS.
20. THE ELECTRICAL CONTRACTOR SHALL NOT UTILIZE A "COMMON NEUTRAL" ON MULTIPLE BRANCH CIRCUIT WIRING SYSTEMS WHICH ARE FEEDING RECEPTACLES WHICH ARE USED TO SERVE COMPUTERS OR OTHER ITEMS OF ELECTRONIC EQUIPMENT. EACH SUCH CIRCUIT SHALL BE RUN WITH ITS OWN DEDICATED NEUTRAL WIRE.
21. ALL CABLES LOCATED ABOVE ACCESSIBLE CEILINGS SHALL BE SUPPORTED FROM THE STRUCTURE. CABLES SHALL NOT BE ROUTED ON CEILING PANELS.
22. SEE MECHANICAL DRAWINGS FOR EXACT LOCATION OF DUCT MOUNTED SMOKE DETECTORS FOR ALL UNITS RATED AT 2000 CFM OF RETURN AIR. DETECTORS TO BE PROVIDED, INSTALLED, AND CONNECTED BY E.C.
23. THE CONTRACTOR SHALL SUBMIT TO THE OWNER CERTIFICATES OF INSPECTION FOR THE ELECTRICAL INSTALLATION FROM AN APPROVED INSPECTION AGENCY UPON COMPLETION OF ELECTRICAL WORK.
24. THE ENTIRE ELECTRICAL SYSTEM SHALL BE TESTED FOR PROPER GROUNDING AND OPERATION. TEST SHALL VERIFY THAT THE SYSTEM HAS NO SHORT CIRCUITS, OPENS, OVERLOADS, OR PANEL IMBALANCES. THE CONTRACTOR SHALL FURNISH ALL LABOR, MATERIALS AND TEST INSTRUMENTS. ALL EQUIPMENT AND WIRING SYSTEMS SHALL BE GROUNDED IN ACCORDANCE WITH THE REQUIREMENTS OF THE NATIONAL ELECTRICAL CODE.
25. PRIOR TO FINAL ACCEPTANCE OF THE ELECTRICAL WORK, THE ELECTRICAL CONTRACTOR SHALL SUBMIT TO THE OWNER A WRITTEN STATEMENT GUARANTEEING ALL EQUIPMENT, MATERIALS, AND WORKMANSHIP FOR A PERIOD OF ONE YEAR FROM THE DATE OF ACCEPTANCE OF THE PROJECT. UPON WRITTEN NOTICE TO THE CONTRACTOR DURING THE WARRANTY PERIOD, THE CONTRACTOR, AT NO EXPENSE TO THE OWNER, SHALL REPAIR OR REPLACE ALL DEFECTIVE MATERIALS OR WORKMANSHIP.
26. ALL WORK SHALL BE INSTALLED SO AS TO BE READILY ACCESSIBLE FOR OPERATION MAINTENANCE, AND REPAIR. MINOR DEVIATIONS FROM THE PLANS MAY BE MADE TO ACCOMPLISH THIS, SUBJECT TO THE APPROVAL OF THE ENGINEER.
27. THE ELECTRICAL CONTRACTOR SHALL USE MAXIMUM OF 6' OF FLEXIBLE CONDUIT FOR FOR EQUIPMENT SUBJECT TO VIBRATION, NOISE TRANSMISSION, OR MOVEMENT, AND FOR ALL MOTORS. USE LIQUID TIGHT FLEXIBLE CONDUIT IN WET OR DAMP LOCATIONS. INSTALL SEPARATE GROUND CONDUCTOR ACROSS FLEXIBLE CONNECTIONS.
28. ALL RECEPTACLES FED FROM PANELBOARDS DESIGNATED AS "CP" SHALL BE HUBBELL 52526RY, GRAY IN COLOR (OR ENGINEER APPROVED EQUAL). ALL OTHER RECEPTACLES SHALL BE HUBBELL 52521, IVORY IN COLOR (OR ENGINEER APPROVED EQUAL).
29. ALL WIRING SHALL BE COPPER CONDUCTOR WITH 600 VOLT TYPE THHN, OR THWN INSULATION IN CONDUIT. THE MINIMUM SIZE WIRE FOR LIGHTING AND POWER CIRCUITS SHALL BE #12 AWG. SOLID CONDUCTORS SHALL BE USED FOR NUMBER 10 AND 12; STRANDED CONDUCTORS SHALL BE USED FOR NUMBER 8 AND LARGER. THE CONTRACTOR MAY USE METAL CLAD TYPE 'MC' WHERE ALLOWED BY THE NATIONAL ELECTRICAL CODE AND APPROVED FOR USE BY THE AUTHORITIES HAVING JURISDICTION.
30. ALL MATERIALS AND EQUIPMENT FURNISHED FOR THIS PROJECT SHALL BE NEW, LISTED, AND APPROVED BY UL.
31. THE CONTRACTOR SHALL OBTAIN ALL NECESSARY PERMITS, INSPECTIONS, LICENSES AND PAY UTILITY COMPANY FEES.
32. THE ELECTRICAL CONTRACTOR SHALL PROVIDE HOUSE KEEPING PADS FOR ELECTRICAL EQUIPMENT FURNISHED UNDER THE ELECTRICAL.
33. MAIN SWITCHBOARDS AND TRANSFORMERS SHALL BE LOCATED A MINIMUM OF 15' FROM MDF/IDF RACKS AND/OR AND DATA OUTLET.
34. MECHANICAL CONTRACTOR SHALL FURNISH AND INSTALL ALL MOTOR STARTERS WITH DRIVEN EQUIPMENT. ELECTRICAL CONTRACTOR SHALL PROVIDE CONDUIT AND FEEDER CABLES FROM PANELBOARD SOURCES TO STARTERS.
35. ELECTRICAL CONTRACTOR SHALL COORDINATE WITH THE FINAL ARCHITECTURAL FURNITURE /CABINET DRAWINGS FOR ALL RECEPTACLES FINAL LOCATION, AND ELEVATION PRIOR TO INSTALLATION OF ROUGH-IN BOXES AND/OR CONDUITS.
36. THE ELECTRICAL CONTRACTOR SHALL PROVIDE LOCALIZED SWITCH, LAMPS, AND WIRING NECESSARY FOR TERMINATION OF FUME HOOD MANUFACTURER PROVIDED LIGHT FIXTURE AND RECEPTACLE.
37. ALL T8 32 WATT LAMPS SHALL BE BY SYLVANIA TYPE, 800XP/XL ECOLOGIC SERIES WITH QUICKTRONIC INSTANT START QHE HIGH EFFICIENCY BALLAST OR APPROVED EQUAL BY PHILIPS LIGHTING OR GENERAL ELECTRIC LAMP DIVISION. REFER TO SPECIFICATION 16511 SECTION 2.3-FLUORESCENT LAMPS AND BALLAST REQUIREMENTS.
38. THE ELECTRICAL CONTRACTOR SHALL REFER TO THE TECHNOLOGY DRAWINGS FOR ADDITIONAL WORK REQUIRED UNDER THIS CONTRACT. ADDITIONAL WORK SHALL INCLUDE BUT NOT BE LIMITED TO CONCEALED RACEWAY SYSTEM FOR DATA CABLING, SURFACE MOUNTED RACEWAY, LADDER RACK SUPPORT SYSTEM, SLEEVES, PULL BOXES, ETC. INSTALLATION OF TECHNOLOGY RACEWAYS IS THE RESPONSIBILITY OF THE ELECTRICAL CONTRACTOR.
39. THE ELECTRICAL CONTRACTOR SHALL PROVIDE STRUCTURAL SUPPORT AND BRACING WHERE REQUIRED FOR ALL EQUIPMENT IN ACCORDANCE WITH SEISMIC SPECIFICATION 16071. SEE DETAILS ON DRAWING E1.5. EQUIPMENT REQUIRING VIBRATION ISOLATION SHALL INCLUDE ALL FLOOR/WALL MOUNTED PANELS, SWITCHGEAR, AND TRANSFORMERS. SEISMIC RESTRAINTS SHALL BE SUPPLIED FOR ALL CONDUITS 2 1/2" AND LARGER SUPPORTED MORE THAN 12" FROM STRUCTURAL ELEMENTS OF THE BUILDING.
40. ALL MOUNTING HEIGHTS SHOWN ARE ABOVE FINISHED FLOOR UNLESS OTHERWISE NOTED.
41. ALL BALLAST ARE TO BE FROM SYLVANIA EXTREME OR APPROVED EQUAL.
42. COORDINATE ALL DEVICE LOCATIONS IN MDF/IDF ROOMS WITH TECHNOLOGY CONSULTANT PRIOR TO INSTALLATION.
43. PROVIDE TWIST LOCK DEVICES FOR MDF/IDF ROOMS AS INDICATED ON TECHNOLOGY PLANS.
44. THE ELECTRICAL CONTRACTOR SHALL PROVIDE A DUPLEX RECEPTACLE, WIRING, RACEWAY AND CIRCUIT BREAKER AS NECESSARY FOR TERMINATION OF REMOTE ATC PANELS LOCATED IN FIELD BY MECHANICAL CONTROLS CONTRACTOR. PROVIDE AN ALLOWANCE FOR THREE LOCATIONS TO BE DETERMINED IN THE FIELD.
45. THE ELECTRICAL CONTRACTOR SHALL PROVIDE A DUPLEX RECEPTACLE, WIRING, RACEWAY TIED INTO LOCAL 120V POWER SOURCE AS NECESSARY FOR TERMINATION OF CONDENSATE PUMPS LOCATED IN FIELD BY MECHANICAL CONTROLS CONTRACTOR. PROVIDE AN ALLOWANCE FOR FIVE LOCATIONS TO BE DETERMINED IN THE FIELD.
46. ELECTRICAL CONTRACTOR SHALL INCLUDE IN THE BID PRICE, TEN (10) ADDITIONAL EXIT SIGNS COMPLETE WITH ALL WIRING (2#12,1#12 GND.- 3/4"C.) AND INSTALLATION COST. EXACT LOCATIONS TO BE DETERMINED IN FIELD.
47. ELECTRICAL CONTRACTOR SHALL INCLUDE IN THE BID PRICE, FIFTY (50) ADDITIONAL RECEPTACLES COMPLETE WITH WIRING (2#12,1#12 GND.- 3/4"C., JUNCTION BOXES, COVER PLATES, ETC.) AND INSTALLATION COST. EXACT LOCATIONS TO BE DETERMINED IN FIELD.
48. THE ELECTRICAL CONTRACTOR SHALL PROVIDE A SIGN PLACED AT SERVICE ENTRANCE EQUIPMENT INDICATING TYPE AND LOCATION OF ON-SITE EMERGENCY POWER SOURCE.
49. ALL FUSED AND NON-FUSED DISCONNECT SWITCHES SHALL HAVE: 600 VOLT RATING FOR 480 VOLT CIRCUITS & 250 VOLT RATING FOR 208 VOLT CIRCUITS. SIZE FUSES TO COMPLY WITH NAMEPLATE RATING OF EQUIPMENT SERVED.
50. THE ELECTRICAL CONTRACTOR SHALL PROVIDE PLASTIC LAMP SLEEVES ON ANY FIXTURE THAT DOESN'T USE A BAFFLE, METAL LOUVERS, OR LENS THAT WOULD BE INSTALLED BELOW EACH LAMP FOR PROTECTION OF OCCUPANTS.
51. ALL CIRCUIT BREAKERS SERVING HEAT TRACE CIRCUITS OR EQUIPMENT SHALL BE GFPE RATED IN ACCORDANCE WITH NEC REQUIREMENTS.
52. ALL CIRCUIT BREAKERS SERVING EQUIPMENT LOCATED UNDER HOOD SYSTEM IN KITCHEN SHALL BE SHUNT TRIP TYPE WITH 1A/1B OPTION.
53. ALL RECEPTACLES LOCATED IN PRE-KINDERGARTEN & KINDERGARTEN ROOMS/LAVATORIES SHALL BE TAMPERPROOF/CHILD SAFETY TYPE IN ACCORDANCE WITH NJAC CHAPTER 26. (4)
54. PROVIDE LUTRON H SERIES BALLAST OR EQUAL AND ASSOCIATED EQUIPMENT FOR ALL LIGHTING FIXTURES IN CLASSROOMS. REFER TO DETAIL 1 ON SHEET E-8 FOR GENERAL WIRING DIAGRAM FOR LIGHTING FIXTURE CONTROL IN CLASSROOM AREAS. EACH CLASSROOM SHALL CONTAIN A GENERAL LIGHTING SWITCH (TYPICALLY LOCATED AT ENTRY DOOR/S AND A TEACHER WALL STATION SWITCH (TYPICALLY LOCATED ON TEACHING WALL) FOR CONTROL.
55. DO NOT INSTALL JUNCTION BOXES, DEVICE BOXES ETC. BACK TO BACK ON FIRE RATED WALLS. WHERE LOCATIONS ARE IDENTIFIED TO HAVE BOXES INSTALLED IN THIS MANNER, INSTALL IN ACCORDANCE WITH THE INTERNATIONAL BUILDING CODE (IBC) REQUIREMENTS. (9)

ALTERNATE LIGHTING MANUFACTURERS (10)

ALL TYPE "A" FIXTURES - FINELITE, LITECONTROL, OR APPROVED EQUAL
TYPE "B,C,D,F1,F2,,H, & I"FIXTURES - LUMAX, LEGION, NATIONAL, OR APPROVED EQUAL
TYPE "G" FIXTURE - LUMAX, LEGION, NATIONAL, OR APPROVED EQUAL
TYPE "E,K" FIXTURES - LUMAX, LEGION, NATIONAL, OR APPROVED EQUAL
TYPE "J,U" - LITHONIA, ZUMTOBEL, OR APPROVED EQUAL
TYPE "L" - CORELITE, SELUX, OR APPROVED EQUAL
TYPE "M,N" - WINONA OR APPROVED EQUAL
TYPE "P & R" FIXTURES - LUMENPULSE, METEOR, OR APPROVED EQUAL
TYPE "Q" - PEACHTREE OR APPROVED EQUAL
TYPE "S" - INSIGHT OR APPROVED EQUAL
TYPE "X1,X2,X3" FIXTURES - SURE-LITES, DUAL-LITE, OR APPROVED EQUAL
TYPE "SLA, SLB, SLC" FIXTURES - BEGA OR APPROVED EQUAL
TYPE "SLD" - US ARCHITECTURAL LIGHTING OR APPROVED EQUAL
TYPE "SLE" - SOLERA LIGHTING OR APPROVED EQUAL
TYPE "SLF" - LUMINUS LIGHTING OR APPROVED EQUAL
TYPE "SLG" - BETACALCO OR APPROVED EQUAL

INSTALLED LIGHTING INTENSITY LOCATIONS:	MINIMUM ACCEPTABLE FOOTCANDLES	ACTUAL FOOTCANDLE LEVEL
CLASSROOM, INSTRUCTIONAL AREAS, COMPUTER RMS.- ON WORK SURFACE	50	50 TO 55
OFFICES	50	65 TO 70
LIBRARIES, CONFERENCE ROOMS, WORK ROOMS	50	55 TO 60
RECEPTION ROOMS, GYMNASIUM	30	50
TOILET ROOMS	10	25
CORRIDORS CONTAINING LOCKERS, STAIRWAYS	10	15
CORRIDORS WITHOUT LOCKERS AND STORE ROOMS	5	10
STAFF TOILETS	20	23

MOUNTING HEIGHT CHART - ELECTRICAL EQUIPMENT

MOUNTING HEIGHT (AFF)	EQUIPMENT SYMBOL (OR REFER TO DESCRIPTION, NEXT COLUMN)	DESCRIPTION OF EQUIPMENT (DEVICES, OUTLETS, ETC.)
12'-0"		EXTERIOR WALL MOUNTED LIGHTING FIXTURES
10'-0"		BATTERY OPERATED EMERGENCY LIGHTING UNITS OR REMOTE MOUNTED HEADS (OR 12" BELOW CEILING WHICH EVER HEIGHT IS LOWER)
8'-6"		PENDANT MOUNTED INDUSTRIAL AND STRIP LIGHTING FIXTURES
8'-4"	SP	WALL MOUNTED CLOCKS AND SPEAKERS (OR 9" BELOW CEILING WHICH EVER HEIGHT IS LOWER)
7'-6"		TOP OF EXIT SIGNS (NOT MOUNTED ABOVE A DOOR)
BOTTOM OF DEVICE NOT LESS THAN 80" & NOT GREATER THAN 96"AFF	F	FIRE ALARM NOTIFICATION DEVICES
6'-6"		CENTERLINE OF INTERIOR WALL MOUNTED FIXTURES
6'-0"		MAXIMUM ELEVATION OF DISCONNECT SWITCHES, STARTERS AND CONTACTORS
4'-6"		MAXIMUM ELEVATION OF WALL MOUNTED PHONES (3'-6" FOR ADA DEVICES)
4'-0"		WALL MOUNTED WIREMOLD
3'-6"	EPO S S3	WALL MOUNTED ELECTRICAL CONTROL DEVICES, SWITCHES, MANUAL MOTOR STARTERS
3'-0"		WALL MOUNTED RECEPTACLE IN MECHANICAL, ELECTRICAL, AND ELEVATOR ROOMS AND ON BUILDING EXTERIORS
1'-6"	C TC	WALL MOUNTED RECEPTACLE, DATA OUTLET, TELEPHONE OUTLET OR SPECIAL RECEPTACLE
OPERABLE PART OF PULL STATION NOT LESS THAN 3'-6" NOR MORE THAN 4'-0" AFF	F	WALL MOUNTED FIRE ALARM PULL STATION
TOP OF DEVICE AT 90"AFF OR 6" BELOW CEILING - WHICHEVER IS LOWER	H	FIRE ALARM HORN UNIT

1. MOUNTING HEIGHT OF EQUIPMENT LISTED SHALL BE AS INDICATED OR AS SPECIFIED ON THE DRAWINGS. ACTUAL MOUNTING HEIGHT MAY BE ADJUSTED TO FIELD CONDITIONS, INCLUDING THE WALL CONSTRUCTION ELEMENTS (BLOCKS, ETC.).
2. MOUNTING HEIGHT SHALL COMPLY WITH NJAC 5.23, SUBCHAPTER 7 AND THE ICC/ANSI 117.1
3. MOUNTING HEIGHT INDICATED FOR THE CENTERLINE OF THE DEVICE OR OUTLET, OR TO THE CENTER OF THE OPERATING CONTROL DEVICE, UNLESS NOTED OTHERWISE. HEIGHTS INDICATED ARE APPLICABLE OVER GRADE, PLATFORM AND OTHER OPERATING LEVELS, AS WELL.
4. RECEPTACLES OUTLETS SHALL BE 12" ABOVE COUNTERTOP, 6" ABOVE TABLE OR DESKTOP, 4" ABOVE BACKSPLASH OR AS NOTED ON ELECTRICAL OR ARCHITECTURAL LAYOUTS AND DETAILS.
5. THIS CHART, INCLUDING THE NOTES, ARE APPLICABLE EVEN IF MOUNTING HEIGHT IS SPECIFIED ON THE SYMBOL LIST.

ELECTRICAL SYMBOL LIST

NOT ALL SYMBOLS ARE USED ON THE DRAWINGS
FOR FIRE PROTECTION SYMBOLS SEE DRAWING E-5

PP1-3-A-Sa
- INDICATES POWER SOURCE PANEL
- INDICATES PANEL CIRCUIT NUMBER
- INDICATES FIXTURE TYPE (WHERE NEEDED FOR CLARIFICATION)
- INDICATES SWITCH LOCATION (WHERE NEEDED FOR CLARIFICATION)

2'x4' FLUORESCENT LIGHTING FIXTURE (PRISMATIC AND PARABOLIC TYPES)
2'x4' FLUORESCENT LIGHTING FIXTURE ON EMERGENCY CIRCUIT (PRISMATIC AND PARABOLIC TYPES)
2'x2' FLUORESCENT LIGHTING FIXTURE (PRISMATIC AND PARABOLIC TYPES)
2'x2' FLUORESCENT LIGHTING FIXTURE ON EMERGENCY CIRCUIT (PRISMATIC AND PARABOLIC TYPES)
INDIRECT FLUORESCENT LIGHTING FIXTURE
INDIRECT FLUORESCENT LIGHTING FIXTURE ON EMERGENCY CIRCUIT
WALL MOUNTED FLUORESCENT LIGHTING FIXTURE
WALL MOUNTED FLUORESCENT LIGHTING FIXTURE ON EMERGENCY CIRCUIT
EMERGENCY EGRESS LIGHTING FIXTURE - WALL MOUNTED
DOWNLIGHT
DOWNLIGHT ON EMERGENCY CIRCUIT
WALL PACK WALL MOUNTED LIGHTING FIXTURE - COORDINATE EXACT HEIGHT & LOCATION WITH OWNER / ARCHITECT APPROVAL
EXIT SIGN - ARROWS AS INDICATED ON PLANS SOLID FILL INDICATES EXIT SIGN FACE - CEILING MOUNTED
EXIT SIGN - ARROWS AS INDICATED ON PLANS SOLID FILL INDICATES EXIT SIGN FACE - WALL MOUNTED
ROOF LIGHT AND RECEPTACLE - SEE DETAIL 4/E1.4
S — SINGLE POLE SWITCH - MOUNTED 42" AFF UNLESS OTHERWISE NOTED
S_3 — THREE WAY SWITCH - MOUNTED 42" AFF UNLESS OTHERWISE NOTED
S_4 — FOUR WAY SWITCH - MOUNTED 42" AFF UNLESS OTHERWISE NOTED
S_W — TEACHERS WALL STATION FOR LIGHTING CONTROL
S_K — KEY OPERATED SWITCH - MOUNTED 42" AFF UNLESS OTHERWISE NOTED PASS&SEYMOUR SECURITY SWITCH CAT # 20AC1-KL -SINGLE POLE 20AC2-KL-DOUBLE POLE, 20AC3-THREE WAY, 20AC4-KL-FOUR WAY
OS — CEILING MTD DUAL TECHNOLOGY OCCUPANCY SENSOR
So — AUTOMATIC WALL SWITCH OCCUPANCY SENSOR - MOUNTED 42" AFF UNLESS OTHERWISE NOTED
S_M — MOTOR RATED SWITCH WITH THERMAL PROTECTION
DUPLEX RECEPTACLE, 125V, 20A - MOUNTED 18" AFF UNLESS OTHERWISE NOTED
TV — DUPLEX RECEPTACLE, 125V, 20A - MOUNTED AT CEILING UNLESS OTHERWISE NOTED
SB — QUADRAPLEX RECEPTACLE 125V, 20A, - COORDINATE EXACT MOUNTING LOCATION WITH FINAL APPROVED SMARTBOARD INSTALLTION AND ELECTRIAL CONNETION REQUIREMENTS.
CP — DUPLEX RECEPTACLE, 125V, 20A - MOUNT WITHIN 3' OF CONDENSATE PUMP
QUADRAPLEX RECEPTACLES 125V, 20A, - MOUNTED 18" AFF UNLESS OTHERWISE NOTED
S — DUPLEX RECEPTACLE, 125V, 20A - GFCI TYPE FOR SINK PLUG IN TRANSFORMER UNIT. LOCATE IN ACCORDANCE WITH SINK EQUIPMENT MANUFACTURER RECOMMENDATIONS.

SPECIAL OUTLET
MOTOR
EPO — EMERGENCY POWER & GAS OFF PUSHBUTTON - MOUNT 54" AFF
EPOR — REMOTE EMERGENCY POWER & GAS OFF PUSHBUTTON - MOUNT AT TEACHER'S DEMONSTRATION TABLE
FUSED SAFETY SWITCH
FUSED COMBINATION MAGNETIC STARTER OR VFD - WITH HAND OFF AUTO AND RED & GREEN INDICATING LIGHTS FURNISHED WITH MECHANICAL EQUIPMENT BY HVAC CONTRACTOR.
J — JUNCTION BOX
JR — JUNCTION BOX FOR FUTURE RADON FAN
JHT — JUNCTION BOX FOR HEAT TRACE EQUIPMENT - PROVIDE FINAL CONNECTION TO HEAT TRACE EQUIPMENT. ALL CIRCUIT BREAKERS SERVING HEAT TRACE SHALL BE GFPE TYPE.
MULTISERVICE FLUSH FLOOR BOX WITH TOPGUARD PROTECTION, 1 DUPLEX RECEPTACLE, 1 MICROPHONE WIREMOLD CAT# 880W2-828R-829CK-1 OR ENGINEER AND OWNER APPROVED EQUAL (MUST PASS MOP TEST)
MULTISERVICE FLUSH FLOOR BOX WITH TOP GUARD PROTECTION, 2 DUPLEX RECEPTACLES AND PROVISIONS FOR DATA. WIREMOLD CAT# RFB4SS PROVIDE ALL APPURTANENCES NECESSARY. PROVIDE (1) 1" CONDUIT FOR POWER TO NEAREST WALL ROUTED TO 6" ABOVE DROP CEILING SPACE. PROVIDE (1) 1" CONDUIT FOR DATA TO NEAREST WALL ROUTED TO 6" ABOVE DROP CEILING SPACE.
PLUGMOLD, RECEPTACLES MOUNTED EVERY 18" O.C. - UNLESS INDICATED OTHERWISE ON PLAN MOUNTED 18" AFF UNLESS SHOWN ABOVE CASEWORK. IF SHOWN ABOVE CASEWORK PLUGMOLD SHALL BE ROUTED 2" ABOVE BACKSPLASH. WIREMOLD# 5400 SERIES OR ENGINEER APPROVED EQUAL PROVIDE ALL APPURTANANCES NECESSARY FOR A COMPLETE INSTALLATION.
ELC — EMERGENCY LIGHTING CONTROLLER UNIT TO ALLOW FOR AUTOMATIC TRANSFER WHEN NORMAL POWER FAILS REGUARDLESS OF THE LOCAL CONTROL SWITCH POSITION. (LOCATED ABOVE CORR./ PNL.OR CLSRM.CEILING) REFER TO DETAIL ON E-8 FOR GENERAL REQUIREMENTS.
DS — CEILING MTD DAYLIGHT SENSOR
LZC — LIGHTING ZONE CONTROLLER - MOUNTED ABOVE CLG.TO ROOM IN CORRIDOR
PANELBOARD - SURFACE MOUNTED 480V
PANELBOARD - SURFACE MOUNTED 208V
PANELBOARD - FLUSH MOUNTED
BRANCH CIRCUIT WIRING - CONCEALED
HOMERUN TO PANELBOARD
TVSS — TRANSIENT VOLTAGE SURGE SUPPRESSOR
E.C. — ELECTRICAL CONTRACTOR
U/G — UNDERGROUND
B.C. — BELOW CEILING
AFF — ABOVE FINISHED FLOOR
WG — WIRE GUARD
WP — WEATHERPROOF
GFI — GROUND FAULT CIRCUIT INTERRUPTER
EWC — ELECTRIC WATER COOLER
GF — GROUND FAULT PROTECTION
PL — LOSS OF PHASE PROTECTION
PM — MULTI FUNCTION POWER MONITOR
M — UTILITY COMPANY METER
HH — 12" BY 12" IN GROUND ENCLOSURE/HANDHOLE WITH BASE AND COVER QUAZITE OR APPROVED EQUAL
(9) ESN — CLASSROOM LIGHTING CONTROL 'ENERGI SAVR NODE' W/LUTRON ECOSYSTEM MODULE OR EQUIVALENT. CLASSROOM NUMBERS INDICATE ROOMS SERVED. REFER TO DETAIL X/XXX FOR GENERAL WIRING DIAGRAM.
OSM — CLASSROOM LIGHTING CONTROL WIRELESS 'OS SENSOR MODULE' - LUTRON OR EQUIVALENT. REFER TO DETAIL X/XXX FOR GENERAL WIRING DIAGRAM. (8)
HHU — 28"W X 60"L X 34"D HANDHOLE FOR UTILITY (PSE&G) PRIMARY CABLES - IN ACCORDANCE WITH PSE&G REQUIREMENTS. PRECAST HANDHOLE (ROTONDO PRECAST) WITH FRAME AND COVERS (CAMPBELL FOUNDRY).

ABBREVATIONS

A.F.F.	ABOVE FINISHED FLOOR	N.E.C.	NATIONAL ELECTRIC CODE
C., CND	CONDUIT	PVC	POLYVINAL CHLORIDE CONDUIT, SCHEDULE 40
B.C.	BELOW CEILING	SW	SWITCH
DISC.	DISCONNECT	TVSS	TRANSIENT VOLTAGE SURGE SUPRESSOR
DWG	DRAWING	UG, U/G	UNDERGROUND
E.C.	ELECTRICAL CONTRACTOR	W/	WITH
EWC	ELECTRIC WATER COOLER	WG	WIRE GUARD
F.P.C.	FIRE PROTECTION CONTRACTOR	WP	WEATHERPROOF
G., GND	GROUND	PH	PHASE
GEN	GENERATOR	V	VOLT
K.E.C.	KITCHEN EQUIPMENT CONTRACTOR	4W	FOUR WIRE
KW	KILOWATTS	25A	25 AMPERES
KVA	KILOVOLT AMPERES	U.O.N.	UNLESS OTHERWISE NOTED

LIGHT FIXTURE SCHEDULE

FIXT TYPE	DESCRIPTION	MANUFACTURER & CATALOG NO.	MOUNTING REC.	MOUNTING SURF.	MOUNTING SUSP.	LAMPS & VOLTAGE	REMARKS
A1	SEMI-INDIRECT FLUOR.FIXT. WITH COLD ROLLED STL HSG. LENGTH TO BE 4FT	MFR. PEERLESS CAT# PRM4-232-WHR-SSB-R4-277-X-XSE-EC-SCT-LP835-F1-15-C099-AC6-OJB			X	2-32WATT T8 277V	FIXT.COLOR BY ARCH. (SEE NOTES 37 & 54)
A2	SAME AS TYPE "A1" EXCEPT 8 FOOT LONG	MFR. PEERLESS CAT# PRM4-232-WHR-SSB-R8-277-X-XSE-EC-SCT-LP835-F1-15-C099-AC6-OJB			X	4-32WATT T8 277V	FIXT.COLOR BY ARCH. PROVIDE EC OPTION WHERE FIXTURES ARE FED VIA AN EMER CIRCUIT (SEE NOTES 37 & 54)
A3	SAME AS TYPE "A1" EXCEPT 12 FOOT LONG	MFR. PEERLESS CAT# PRM4-232-WHR-SSB-R8-277-X-XSE-EC-SCT-LP835-F1-15-C099-AC6-OJB			X	6-32WATT T8 277V	FIXT.COLOR BY ARCH. PROVIDE EC OPTION WHERE FIXTURES ARE FED VIA AN EMER CIRCUIT (SEE NOTES 37 & 54)
A4	SAME AS TYPE "A1" EXCEPT 16 FOOT LONG	MFR. PEERLESS CAT# PRM4-232-WHR-SSB-R8-277-X-XSE-EC-SCT-LP835-F1-15-C099-AC6-OJB			X	8-32WATT T8 277V	FIXT.COLOR BY ARCH. PROVIDE EC OPTION WHERE FIXTURES ARE FED VIA AN EMER CIRCUIT (SEE NOTES 37 & 54)
A5	SAME AS TYPE "A1" EXCEPT 20 FOOT LONG	MFR. PEERLESS CAT# PRM4-232-WHR-SSB-R12-277-X-XSE-EC-SCT-LP835-F1-15-C099-AC6-OJB			X	10-32WATT T8 277V	FIXT.COLOR BY ARCH. PROVIDE EC OPTION WHERE FIXTURES ARE FED VIA AN EMER CIRCUIT (SEE NOTES 37 & 54)
A6	SAME AS TYPE "A1" EXCEPT 24 FOOT LONG	MFR. PEERLESS CAT# PRM4-232-WHR-SSB-R12-277-X-XSE-EC-SCT-LP835-F1-15-C099-AC6-OJB			X	12-32WATT T8 277V	FIXT.COLOR BY ARCH. PROVIDE EC OPTION WHERE FIXTURES ARE FED VIA AN EMER CIRCUIT (SEE NOTES 37 & 54)
A7	SAME AS TYPE "A1" EXCEPT 28 FOOT LONG	MFR. PEERLESS CAT# PRM4-232-WHR-SSB-R12-277-X-XSE-EC-SCT-LP835-F1-15-C099-AC6-OJB			X	14-32WATT T8 277V	FIXT.COLOR BY ARCH. PROVIDE EC OPTION WHERE FIXTURES ARE FED VIA AN EMER CIRCUIT (SEE NOTES 37 & 54)
A8	SAME AS TYPE "A1" EXCEPT 32 FOOT LONG	MFR. PEERLESS CAT# PRM4-232-WHR-SSB-R12-277-X-XSE-EC-SCT-LP835-F1-15-C099-AC6-OJB			X	16-32WATT T8 277V	FIXT.COLOR BY ARCH. PROVIDE EC OPTION WHERE FIXTURES ARE FED VIA AN EMER CIRCUIT (SEE NOTES 37 & 54)
B	2'X4' 3 LAMP RECESSED VOLUMETRIC FLUORESCENT TROFFER WITH ACRYLIC DIFFUSER	MFR. LITHONIA CAT# 2VT8 3 32 ADP MVOLT X LP835	X			3-32WATT T8 277V	(SEE NOTE 37)
C1	6"X4' FLUOR TROFFER	MFR. LITECONTROL CAT# LG-D-66N-1-4-T8-PAT.19-CWM-INDX-X (4FT)	X			1-32WATT T8 277V	COORD. FIXTURE POSITION W/ PLANS. PROVIDE TANDEM WIRING AS REQ. (SEE NOTES 37 & 54)
C2	6"X8' FLUOR TROFFER	MFR. LITECONTROL CAT# LG-D-66N-1-4-T8-PAT.19-CWM-INDX-X (8FT)	X			2-32WATT T8 277V	COORD. FIXTURE POSITION W/ PLANS. PROVIDE TANDEM WIRING AS REQ. (SEE NOTES 37 & 54)
C3	6"X12' FLUOR TROFFER	MFR. LITECONTROL CAT# LG-D-66N-1-4-T8-PAT.19-CWM-INDX-X (12FT)	X			3-32WATT T8 277V	COORD. FIXTURE POSITION W/ PLANS. PROVIDE TANDEM WIRING AS REQ. (SEE NOTES 37 & 54)
D	1'X4' REC.FLUOR.TROFFER WITH PRISMATIC LENS	MFR.LITHONIA LTG CAT# SP6232-A19-MVOLT-X	X			2-32WATT T8 277V	(SEE NOTE 37)
E	2'X4' REC.FLUOR.TROFFER WITH PRISMATIC LENS	MFR.LITHONIA LTG CAT# 2SP6332-A19-MVOLT-X	X			3-32WATT T8 277V	(SEE NOTE 37)
F1	1'X4' FLUOR. INDUSTRIAL W/10% UP LIGHT 4 FT LONG	MFR.LITHONIA LTG CAT# AF10 232 MVOLT X HC36 WGAFPV		X	X	2-32WATT T8 277V	(SEE NOTE 37)
F2	1'X8' FLUOR. INDUSTRIAL W/10% UP LIGHT 8 FT LONG	MFR.LITHONIA LTG CAT# TAF10 432 MVOLT X HC36 WGAFPV		X	X	4-32WATT T8 277V	(SEE NOTE 37)
G	2'X4' REC.FLUOR.TROFFER WITH PRISMATIC LENS	MFR.LITHONIA LTG CAT# 2SP6 232 A19 MVOLT X	X			2-32WATT T8 277V	(SEE NOTE 37)
H1	CFL DOWNLIGHT W/CLEAR GLASS LENS	MFR.GOTHAM LTG CAT# AF 2/26DTT 6AR CGL MVOLT GEB10	X			2-26W QUAD 4PIN 277V	
H2	CFL DIMMABLE DOWNLIGHT W/CLEAR GLASS LENS	MFR.GOTHAM LTG CAT# AF 2/26DTT 6AR CGL MVOLT ADEZ	X			2-26W QUAD 4PIN 277V	
I	WALL MOUNTED FLUOR. FIXT	MFR.KENALL CAT# MLHA5 48 F MN CP 232 RS 1 DV 9500		X		2-32WATT T8 277V	(SEE NOTE 37)
J	CFL DOWNLIGHT W/ LENS	MFR.GOTHAM LTG CAT# AF 2/26DTT 6AR CGL MVOLT GEB10	X			2-26W QUAD 4PIN 277V	
K	2'X4' REC.FLUOR.TROFFER WITH PRISMATIC LENS WITH DOUBLE GASKETING	MFR.KENALL LTG CAT# ESEG124 332 X 1 DV 2F 2H U TC	X			3-32WATT T8 277V	(SEE NOTE 37)
L	WALL MOUNTED FLUOR. COVE UPLIGHT WITH FLUORESCENT LAMPS IN CONTINUOUS 48' ROW	PEERLITE LIGHTING COVE LIGHT ENVISION COVE ECX-020003-277		X		24-32WATT T8 277V	TYP FIXT.COLOR TO BE SELECTED BY ARCH. (SEE NOTE 37)
M	WALL MOUNTED LUMINOUS BOWL W/FLOATING BAFFLES & WHITE ACRYLIC DIFFUSER AND MOUNTED ON WALL AT 7'6"AFF	MFR.BETA CALCO ZEDOS TSR CAT# 68 1635 PC OT 277 OR APPROVED EQUAL		X		2-26WATT CFL QUAD-4PIN 277V	TYP FIXT.COLOR TO BE SELECTED BY ARCH.
N	SIMILAR TO TYPE"M" EXCEPT SUSPENDED FROM CEILING AND 37"DIA	MFR.BETA CALCO ZEDOS TSR CAT# 68 3734 PC OT OP 277 DC OR APPROVED EQUAL			X	9-40W BIAX 6UP/3DN 277V	TYP FIXT.COLOR TO BE SELECTED BY ARCH.
P1	PENDANT MOUNTED LED HIGH BAY FIXTURE WITH ALUMINUM HOUSING AND SEMI DIFFUSE LENS.	MFR. LITHONIA CAT# IBL 18L WD SD125 277 LP740 OUTCTR DLC SPD CS11W WGX DWH IBAC240M20 IBLPMP			X	LED 18K 277V	PROVIDE APPROPRIATE ELECTRICAL RECEPTACLE AT CEILING FOR FIXTURE PLUG IN CONNECTION. PROVIDE DUAL SUPPORT.
P2	PENDANT MOUNTED LED HIGH BAY FIXTURE WITH ALUMINUM HOUSING AND SEMI DIFFUSE LENS.	MFR. LITHONIA CAT# IBL 24L WD SD125 277 LP740 OUTCTR DLC SPD CS11W WGX DWH IBAC240M20 IBLPMP X			X	LED 18K 277V	PROVIDE APPROPRIATE ELECTRICAL RECEPTACLE AT CEILING FOR FIXTURE PLUG IN CONNECTION. PROVIDE DUAL SUPPORT. PROVIDE RELAY FOR DUAL SWITCHING.
Q1	PENDANT LED DOWNLIGHT	MFR.GOTHAM LTG CAT# ICO 30/65 6AR LD 55 277 DMXR PM DBL CRS			X	LED - 277V	
Q2	PENDANT LED DOWNLIGHT	MFR.GOTHAM LTG CAT# ICO 30/65 6AR LD 55 277 DMXR PM DBL CRS			X	LED - 277V	
R	PENDANT MTD INCAND. DOWNLIGHT CONN.TO STAGE DIMMING CONT SYS	MFR. GOTHAM CAT # CP8A-BLC-CRS-DBL			X	Q250 WATT PAR 38 FL-120V	
S	SURFACE MOUNTED INDIRECT HID MTD 9FT ABV. SEC FLR	MFR. WINONA LTG CAT # LAS2 LS MH210 277 P1 CPF CTBS QR MOD OR APPROVED EQUAL		X		210 WATT MH PULSE START-277V 250 QUARTZ-120V	CUSTOM COLOR PAINT COLOR BY ARCHITECT & PULSE START TECHNOLOGY
T	NOT USED						
U	RECESSED LED DOWNLIGHT	MFR.GOTHAM LTG CAT# ICO 30/20 6AR LD 25 ADV	X			LED - 120V	PROVIDE APPROPRIATE LED DRIVER COMPATIBLE WITH THE FINAL APPROVED DIMMING SYSTEM
X1	EXIT SIGN SINGLE FACE UNIVERSAL MOUNTING	MFR.LITHONIA LTG CAT # LQM-P-W-3-R		X		LED 120/277V	
X2	EXIT SIGN DUAL FACE UNIVERSAL MOUNTING	MFR.LITHONIA LTG CAT # LQM-P-W-3-R		X		LED 120/277V	
X3	EXIT SIGN SINGLE FACE UNIVERSAL MOUNTING	MFR.KENALL CAT# METSU MW R DT		X		LED 120/277V	WALL MOUNT OR AS INDICATED
SLA	WALL MOUNTED COMPACT FLUOR. 15"SQ W/ CAST GUARD	MFR.KENALL CAT# FS1212R 1M MPA CC 26Q 2 DV PC		X		2-26WATT CFL QUAD-4PIN-277V	CUSTOM COLOR PAINT COLOR BY ARCHITECT
SLB	WALL MOUNTED UPLIGHT AT EGRESS CANOPIES, MTD ON TUBULAR STL	MFR.KENALL CAT# FNU9D 2 A CC 70M 277		X		70 WATT MH - 277V	CUSTOM COLOR PAINT COLOR BY ARCHITECT. PROVIDE APPROPRIATE MOUNTING SYSTEM FOR TUBULAR RAIL MOUNTING.
SLC	WALL MOUNTED DOWNLIGHT AT CANOPIES, MTD ON TUBULAR STL	KENALL LTG CAT# FNL6 24 CC PP 1 25L 40K X 1 DV		X		LED - DUAL VOLT	CUSTOM COLOR PAINT COLOR BY ARCHITECT. PROVIDE APPROPRIATE MOUNTING SYSTEM FOR TUBULAR RAIL MOUNTING.
SLD	20FT 4"SQ STRAIGHT STEEL POLE WITH TYPE THREE DISTRIBUTION	MFR. LITHONIA LTG CAT # DSX1 LED 2 30B530/XX SR3 MVOLT SPA PER TLS DBLXD VALMONT POLE: S2004040 XXY4 DXX				LED - MVOLT	ALL EQUIPMENT TO BE BLACK
SLE	18"DIAX36"H CONCRETE BOLLARD WITH PRE CAST CONCRETE CAP AND HORIZONTAL GRILL	MFR. WAYNE TYLER CAT# 214 LED32 277 CTBS FTBS				LED 277V	ARCH TO PROVIDE COLORS FOR CONCRETE/GRILLE AND CONCRETE TEXTURE
SLF	RECESSED STEPLIGHT FIXTURE WITH LED LAMPS AND STAINLESS STEEL LOUVERED FACEPLATE	BEGA CAT# 2136LED 277 TP K4	X			LED 277V	SECURITY SCREWS AND SCREW DRIVER.
SLG	SURFACE MTG ALUMINUM LINEAR FLUOR WITH TAMPER PROOF LENS AND SCREWS	MFR. KENALL CAT# MLHA8 48 F CC PP 232 SB 1 DV 9500		X		2-32WATT T8 277V	ARCH TO PROVIDE COLOR. PROVIDE SECURITY SCREWS AND SCREW DRIVER
SLH	SURFACE MTG ALUMINUM SURFACE FLUOR. WITH TAMPER PROOF LENS AND SCREWS	MFR. KENALL CAT# MS15FL PIA CC 40L40K DV 9500		X		2-26WATT CFL QUAD-4PIN-277V	ARCH TO PROVIDE COLOR. PROVIDE SECURITY SCREWS AND SCREW DRIVER
SLI	IN GROUND METAL HALIDE FIXTURE TO ILLUMINATE FLAG ON POLE	MFR. HYDREL CAT# 9100 B 150M MVOLT SP FLC10 34B MSR/ISS GEB LP CF				1-150 WATT MH 277V	ARCH TO PROVIDE COLOR. MNT. MIN 3' FROM POLE BASE IN ACCORD W/ MFR RECOMMENDATION
SLJ	IN GROUND METAL HALIDE FIXTURE TO ILLUMINATE SIGNAGE	MFR. BEGA CAT# 8609MH				1-39WATT MH 277V	MOUNT MINIMUM 3' FROM SIGN IN ACCORDANCE WITH MANUFACTURER RECOMMENDATIONS

NOTES
1. REFER TO NOTE 41 FOR BALLAST AND LAMP REQUIREMENTS.
2. REFER TO NOTE 51 FOR LAMP PROTECTION REQUIREMENTS.

SDA
NJ SCHOOLS DEVELOPMENT AUTHORITY

STATE OF NEW JERSEY
ECONOMIC DEVELOPMENT AUTHORITY

DesignIdeasGroup
architecture + planning, llc
15 Bethany Street, New Brunswick, NJ 08901, T: 732.249.6242, F: 732.247.1825
142 West 36th Street, New York, NY 10018, T: 645.584.8419

Richard D. Alderiso, AIA NJ RA AI 15023 NY RA 027416
Vincent A. Myers, AIA NJ RA AI 11415
Jeffrey D. Venezia, AIA NJ RA AI 08271 NY RA 023719-1
Warren W. Winter, AIA NJ RA AI 06853 NY RA 010562-1

CONCORD ENGINEERING
P.A. 24GA27936700
520 South Burnt Mill Road
Voorhees, New Jersey 08043
(856) 427-0200
www.concord-engineering.com

CONSTRUCTION PROGRAM FOR THE
MARSHALL STREET ELEMENTARY SCHOOL
DOE# 4010-N01-02-0169
NJSDA# PA-0006-C04
DCA# OLCEHPC-05--013 ERU# 6095-05
ADDRESS
NJ SDA
1 WEST STATE STREET
TRENTON, NEW JERSEY

PROJECT NO.: 2012-213.00

ISSUED
05/15/09 ISSUED FOR BID
07/06/09 ISSUED FOR BID
08/06/09 DCA REVIEW COMMENTS
09/01/09 ADDENDUM #4
10/05/07 PSE&G HANDHOLE REQ. (8)
(9) 12/17/12 SDA AMENDMENTS 11 & 12
(10) 3/25/13 ADDENDUM NO. 2

DRAWING TITLE
ELECTRICAL SYMBOLS, NOTES AND LEGEND

DRAWING No.
E-1
DWG. NO. OF

Drawing name: G:\AutoCad\2002-jobs\1c02056\Electrical\E-1.dwg Plotted By: NHINKSON Mar 25, 2013 - 4:07pm

PANEL HP1 (TWO SECTION PANEL) – SECTION 1

PANEL IDENTIFICATION: HP1 TWO SECTION PANEL | LOCATION: FLOOR 1, ROOM ELEC, DWG EP-1 | VOLT. 480/277V (65 KAIC) PHASE 3 WIRE 4, 225 A MLO

CKT. NO.	CIRCUIT DESCRIPTION	W/ AWG	KVA	CB	Φ	CB	KVA	W/ AWG	CIRCUIT DESCRIPTION	CKT. NO.
1	HP-1	12	1.9	20/1	A	15/3		△9		2
3		△9		15/3	B		9.2	12	HP-8	4
5	HP-2	12	8.6		C					6
7					A	20/1	4.5	12	HP-11	8
9				15/3	B	20/1			SPARE	10
11	HP-3	12	8.6		C	20/1			SPARE	12
13					A	20/1	3.4	12	HP-12	14
15				15/3	B	20/1			SPARE	16
17	HP-4	12	8.6		C	20/1			SPARE	18
19					A	15/3				20
21				15/3	B		8.6	12	HP-13	22
23	HP-5	12	8.6		C					24
25					A	25/1	4.5	10	HP-14	26
27				15/3	B	20/1	3.4	12	HP-71	28
29	HP-6	12	8.6		C	20/1			SPARE	30
31					A	15/3				32
33	HP-7	10	4.5	25/1	B		9.3	12	HP-15	34
35	SPARE			20/1	C					36
37	SPARE			20/1	A	25/1	4.5	10	HP-16	38
39	HP-9	12	3.0	20/1	B	20/1			SPARE	40
41	HP-10	12	3.0	20/1	C	20/1			SPARE	42

PANEL HP1 (TWO SECTION PANEL) – SECTION 2

PANEL IDENTIFICATION: HP1 TWO SECTION PANEL | LOCATION: FLOOR 1, ROOM ELEC, DWG EP-1

CKT. NO.	CIRCUIT DESCRIPTION	W/ AWG	KVA	CB	Φ	CB	KVA	W/ AWG	CIRCUIT DESCRIPTION	CKT. NO.
43		△9		15/3	A	15/3	△9			44
45	HP-17	12	9.3		B		3.0	12	CUH-4	46
47					C		△9			48
49	HP-18	10	4.5	25/1	A	15/3				50
51				20/1	B		3.0	12	CUH-1	52
53				20/1	C		△9			54
55	HP-54	12	3.0	20/1	A	15/3				56
57				15/3	B		3.0	12	CUH-5	58
59	HP-70	12	8.6		C		△9			60
61					A	15/3				62
63	HP-19	12	3.4	20/1	B		4.0	12	CUH-6	64
65	SPARE			20/1	C		△9			66
67	SPARE			20/1	A	15/3				68
69	HP-20	12	3.4	20/1	B		2.0	12	CUH-8	70
71	SPARE			20/1	C					72
73	SPARE			20/1	A	25/1	4.5	10	HP-21	74
75				15/3	B	20/1		△9	SPARE	76
77	CUH-2	12	2.0		C	20/1			SPARE	78
79					A	25/1	4.5	10	HP-22	80
81	SPARE	△9		20/1	B	20/1			SPARE	82
83	HP-72	12	3.4	20/1	C	20/1			SPARE	84

CONNECTED (KVA) = 164.4 △9
CONNECTED AMPS = 197.7

SURFACE ☒
FLUSH ☐
200% NEUTRAL BUS ☐
ISOLATED GROUND BUS ☐
GROUND BUS ☒

PANEL HP1A

PANEL IDENTIFICATION: HP1A | LOCATION: FLOOR 1, ROOM ELEC, DWG EP-1 | VOLT. 480/277V (65 KAIC) PHASE 3 WIRE 4, 225 A MLO

Circuits 31 to 42 are crossed out with a large X on the schedule.

CKT. NO.	CIRCUIT DESCRIPTION	W/ AWG	KVA	CB	Φ	CB	KVA	W/ AWG	CIRCUIT DESCRIPTION	CKT. NO.
1			△9	15/3	A	15/3	△9			2
3	CUH-11 C101	12	5.0		B		5.0	12	CUH-11 C115	4
5			△9		C					6
7				15/3	A	15/3		△9		8
9	CUH-1	12	2.0		B		9.3	12	HP-55 N100	10
11					C					12
13				25/3	A	25/3				14
15	SPARE				B				SPARE	16
17					C					18
19				/3	A	/3				20
21	SPACE				B				SPACE	22
23					C					24
25				/3	A	/3				26
27	SPACE				B				SPACE	28
29					C					30
31					A					32
33					B					34
35					C					36
37					A					38
39					B					40
41					C					42

CONNECTED (KVA) = 21.3 △9
CONNECTED AMPS = 25.6

SURFACE ☒
FLUSH ☐
200% NEUTRAL BUS ☐
ISOLATED GROUND BUS ☐
GROUND BUS ☒

PANEL HP2 (TWO SECTION PANEL) – SECTION 1

PANEL IDENTIFICATION: HP2 TWO SECTION PANEL | LOCATION: FLOOR 2, ROOM ELEC, DWG EP-6 | VOLT. 480/277V (65 KAIC) PHASE 3 WIRE 4, 300 A MLO

CKT. NO.	CIRCUIT DESCRIPTION	W/ AWG	KVA	CB	Φ	CB	KVA	W/ AWG	CIRCUIT DESCRIPTION	CKT. NO.
1		△9		25/3	A	15/3		△9		2
3	HP-61	10	15.0		B		8.6	12	HP-34	4
5					C					6
7				25/3	A	15/3				8
9	HP-62	10	15.0		B		9.2	12	HP-35	10
11					C					12
13				15/3	A	15/1	3.0	12	HP-36	14
15	HP-29	12	9.3		B	15/1	3.0	12	HP-37	16
17					C	15/1	3.0	12	HP-38	18
19				15/3	A	20/1	3.4	12	HP-39	20
21	HP-30	12	9.3		B	20/1			SPARE	22
23					C	20/1			SPARE	24
25	HP-31	10	4.5	25/1	A	15/1	3.0	12	HP-40	26
27	SPARE			20/1	B	15/1	3.0	12	HP-42	28
29	SPARE			20/1	C	15/3		△9		30
31				15/3	A		8.6	12	HP-41	32
33	HP-32	12	8.6		B					34
35		△9			C	20/1	3.4	12	HP-27	36
37				15/3	A	20/1			SPARE	38
39	HP-33	12	8.6		B	20/1			SPARE	40
41					C	20/1			SPARE	42

PANEL HP2 (TWO SECTION PANEL) – SECTION 2

PANEL IDENTIFICATION: HP2 TWO SECTION PANEL | LOCATION: FLOOR 2, ROOM ELEC, DWG EP-6

CKT. NO.	CIRCUIT DESCRIPTION	W/ AWG	KVA	CB	Φ	CB	KVA	W/ AWG	CIRCUIT DESCRIPTION	CKT. NO.
43	HP-43	10	4.5	25/1	A	15/3		△9		44
45	SPARE			20/1	B		9.9	12	HP-49	46
47	SPARE			20/1	C					48
49		△9		15/3	A	15/3				50
51	HP-44	12	9.2		B		9.9	12	HP-50	52
53					C					54
55	HP-45	10	4.5	25/1	A	15/3				56
57	SPARE			20/1	B		9.9	12	HP-51	58
59	SPARE			20/1	C					60
61		△9		15/3	A	15/3				62
63	HP-46	12	9.3		B		8.6	12	HP-52	64
65					C					66
67	HP-63	12	1.9	15/1	A	25/1	4.5	10	HP-53	68
69	HP-47	12	3.4	20/1	B	20/1			SPARE	70
71	SPARE			20/1	C	20/1		△9	SPARE	72
73	SPARE			20/1	A	25/1	4.5	10	HP-64	74
75		△9		15/3	B	20/1			SPARE	76
77	HP-48	12	8.6		C	20/1			SPARE	78
79					A	20/3				80
81	HP-74	12	3.4	20/1	B		5.0	12	CUH-11 C210	82
83	SPARE			20/1	C					84

CONNECTED (KVA) = 215.6 △9
CONNECTED AMPS = 259.3

SURFACE ☒
FLUSH ☐
200% NEUTRAL BUS ☐
ISOLATED GROUND BUS ☐
GROUND BUS ☒

PANEL HP2A

PANEL IDENTIFICATION: HP2A | LOCATION: FLOOR 2, ROOM ELEC, DWG EP-6 | VOLT. 480/277V (65 KAIC) PHASE 3 WIRE 4, 225 A MLO

CKT. NO.	CIRCUIT DESCRIPTION	W/ AWG	KVA	CB	Φ	CB	KVA	W/ AWG	CIRCUIT DESCRIPTION	CKT. NO.
1				25/3	A	25/3				2
3	HRU-1	10	14.5		B		14.5	10	HRU-5	4
5					C					6
7				25/3	A	25/3				8
9	HRU-2	10	14.5		B				SPARE	10
11					C					12
13				25/3	A	25/3				14
15	HRU-3	10	14.5		B		14.5	10	HRU-7	16
17					C					18 △9
19				25/3	A	30/3				20
21	HRU-4	10	14.5		B				SPARE	22
△9 23					C					24
25				30/3	A	25/3				26 △10
27	SPARE				B				SPARE (clouded)	28
29					C					30 △4
31				20/3	A	30/3				32
33	CUH-11 C209	12	5.0		B				SPARE	34
35					C					36 △9
37	SPARE			20/1	A	20/1			SPARE	38
39	SPARE			20/1	B	20/1			SPARE	40
41	SPARE			20/1	C	20/1			SPARE	42

CONNECTED (KVA) = 92.0 △9
CONNECTED AMPS = 110.7 △10

SURFACE ☒
FLUSH ☐
200% NEUTRAL BUS ☐
ISOLATED GROUND BUS ☐
GROUND BUS ☒

PANEL HP3 – SECTION 1

PANEL IDENTIFICATION: HP3 | LOCATION: FLOOR 1, ROOM ELEC STAGE, DWG EP-5 | VOLT. 480/277V (65 KAIC) PHASE 3 WIRE 4, 225 A MLO

CKT. NO.	CIRCUIT DESCRIPTION	W/ AWG	KVA	CB	Φ	CB	KVA	W/ AWG	CIRCUIT DESCRIPTION	CKT. NO.
1		△9		15/3	A	20/3				2
3	HP-60	12	9.9		B		6.0	12	CUH-3 (2)	4
5					C					6
7				20/3	A	15/1	3.4	12	HP-27	8
9	HRU-9	12	4.1		B	15/3		△9		10
11					C		9.2	12	HP-28	12
13		△9		20/3	A					14
15	HP-57	12	13.8		B	25/1	4.5	10	HP-25	16
17					C	20/1	4.5	10	HP-56	18
19	HP-58	12	1.9	15/1	A	20/1			SPARE	20
21				20/3	B	25/1	4.5	10	HP-26	22
23	HRU-8	12	4.1		C	20/1			SPARE	24
25					A	20/1			SPARE	26
27				15/3	B	25/1	4.5	12	HP-23	28
29	CUH-9	12	5.0		C	20/1			SPARE	30
31					A	20/1			SPARE	32
33				20/3	B	15/3				34
35	CUH-9	12	5.0		C		9.9	12	HP-24	36
37		△9			A					38
39	HP-69	12	1.9	20/1	B	20/1	1.9	12	HP-58	40
41	HP-73	12	3.4	20/1	C	20/1			SPARE	42

PANEL HP3 – SECTION 2

PANEL IDENTIFICATION: HP3 | LOCATION: FLOOR 1, ROOM ELEC STAGE, DWG EP-5

CKT. NO.	CIRCUIT DESCRIPTION	W/ AWG	KVA	CB	Φ	CB	KVA	W/ AWG	CIRCUIT DESCRIPTION	CKT. NO.
43				15/3	A	20/3				44
45	CUH-7 ST4	12	3.0		B		1.7	12	EF-1 KITCHEN	46
47					C					48
49				20/3	A	15/3		△9		50
51	MUA-1 KITCHEN	12	3.4		B		8.6	12	HP-59A	52
53			△9		C					54
55				15/3	A	15/3				56
57	CUH-3	12	3.0		B		8.6	12	HP-59B	58
59					C					60
61	SPARE			20/1	A	20/1			SPARE	62
63				20/3	B	20/3				64
65	UH-1	12	3.0		C				SPARE	66
67					A					68
69				15/3	B	20/3				70
71	CUH-10 ST-5	12	2.0		C				SPARE	72
73					A					74
75	SPARE			20/1	B	20/1			SPARE	76
77	SPARE			20/1	C	20/1			SPARE	78
79	SPACE				A				SPACE	80
81	SPACE				B				SPACE	82
83	SPACE				C				SPACE	84

CONNECTED (KVA) = 128.9 △9
CONNECTED AMPS = 155.0

SURFACE ☒
FLUSH ☐
200% NEUTRAL BUS ☐
ISOLATED GROUND BUS ☐
GROUND BUS ☒

PANEL CP1 SECT 2

PANEL IDENTIFICATION: CP1 SECT 2 | LOCATION: FLOOR 1, ROOM ELEC, DWG E-14 | VOLT. 280/120V (22 KAIC) PHASE 3 WIRE 4, 400 A MLO

CKT. NO.	CIRCUIT DESCRIPTION	W/ AWG	KVA	CB	Φ	CB	KVA	W/ AWG	CIRCUIT DESCRIPTION	CKT. NO.
43	N104/5 SB REC	12	1.0	20/1	A	20/1	1.0	12	N109/10 SB REC	44
45	N102/3 SB REC	12	1.0	20/1	B	20/1	1.0	12	N104/14 SB REC	46
47	N107/8 SB REC	12	1.0	20/1	C	20/1	1.0	12	N122/3 SB REC	48
49	N116/7 SB REC	12	1.0	20/1	A	20/1	1.0	12	N113/4 SB REC	50
51	N121/20 SB REC	12	1.0	20/1	B	20/1	1.0	12	N111/2 SB REC	52
53	N118/9 SB REC	12	1.0	20/1	C	20/1	0.5	12	N106 SB REC	54
55	SPARE			20/1	A	20/1			SPARE	56
57	SPARE			20/1	B	20/1			SPARE	58
59	SPARE			20/1	C	20/1			SPARE	60
61	SPARE			20/1	A	20/1			SPARE	62
63	SPARE			20/1	B	20/1			SPARE	64
65	SPARE			20/1	C	20/1			SPARE	66
67	SPARE			20/1	A	20/1			SPARE	68
69	SPARE			20/1	B	20/1			SPARE	70
71	SPARE			20/1	C	20/1			SPARE	72
73	SPACE				A				SPACE	74
75	SPACE				B				SPACE	76
77	SPACE				C				SPACE	78
79	SPACE				A				SPACE	80
81	SPACE				B				SPACE	82
83	SPACE				C				SPACE	84

CONNECTED (KVA) = 11.5
CONNECTED (AMPS) = 31.8

SURFACE ☒
FLUSH ☐ △5
200% NEUTRAL BUS ☒
ISOLATED GROUND BUS ☒
GROUND BUS ☒

PANEL CP2 SECT 2

PANEL IDENTIFICATION: CP2 SECT 2 | LOCATION: FLOOR 1, ROOM ELEC, DWG E-14 | VOLT. 280/120V (22 KAIC) PHASE 3 WIRE 4, 400 A MLO

CKT. NO.	CIRCUIT DESCRIPTION	W/ AWG	KVA	CB	Φ	CB	KVA	W/ AWG	CIRCUIT DESCRIPTION	CKT. NO.
43	△5 IDF CKT 1 (*)	12	1.0	20/1	A	20/1	1.0	12	IDF CKT 5 (*) △5	44
45	IDF CKT 2 (*)	12	1.0	20/1	B	30/1	1.0	10	IDF CKT 6 (*)	46
47	IDF CKT 3 (*)	12	1.0	20/1	C	30/1	1.0	10	IDF CKT 7 (*)	48
49	IDF CKT 4 (*)	12	1.0	20/1	A	20/1	1.0	12	208/9 SB REC	50
51	204/5 SB REC	12	1.0	20/1	B	20/1	0.5	12	201 SB REC	52
53	202/3 SB REC	12	1.0	20/1	C	20/1	1.0	12	223/4 SB REC	54
55	206/7 SB REC	12	1.0	20/1	A	20/1	1.0	12	216/7 SB REC	56
57	220 SB REC	12	0.5	20/1	B	20/1	1.0	12	221/2 SB REC	58
59	205/6 SB REC	12	1.0	20/1	C	20/1	1.0	12	218/9 SB REC	60
61	202/4 SB REC	12	1.0	20/1	A	20/1	1.0	12	207/8 SB REC	62
63	SPARE			20/1	B	20/1			SPARE	64
65	SPARE			20/1	C	20/1			SPARE	66
67	SPARE			20/1	A	20/1			SPARE	68
69	SPARE			20/1	B	20/1			SPARE	70
71	SPARE			20/1	C	20/1			SPARE	72
73	SPACE				A				SPACE	74
75	SPACE				B				SPACE	76
77	SPACE				C				SPACE	78
79	SPACE				A				SPACE	80
81	SPACE				B				SPACE	82
83	SPACE				C				SPACE	84

△5 CONNECTED (KVA) = 19.0
CONNECTED (AMPS) = 52.6

SURFACE ☒
FLUSH ☐ △5
200% NEUTRAL BUS ☒
ISOLATED GROUND BUS ☒
GROUND BUS ☒

SDA
NJ SCHOOLS DEVELOPMENT AUTHORITY

STATE OF NEW JERSEY
ECONOMIC DEVELOPMENT AUTHORITY

DesignIdeasGroup
architecture + planning, llc
15 Bethany Street, New Brunswick, NJ 08901, T: 732.249.6242, F: 732.247.1825
142 West 36th Street, New York, NY 10018, T: 645.584.8419

Richard D. Alderiso, AIA NJ RA AI 15023 NY RA 027416
Vincent A. Myers, AIA NJ RA AI 11415
Jeffrey D. Venezia, AIA NJ RA AI 08271 NY RA 023719-1
Warren W. Winter, AIA NJ RA AI 06853 NY RA 010562-1

CONCORD ENGINEERING
P.A. 24GA27936700
520 South Burnt Mill Road
Voorhees, New Jersey 08043
(856) 427-0200
www.concord-engineering.com

CONSTRUCTION PROGRAM FOR THE
MARSHALL STREET ELEMENTARY SCHOOL
DOE# 4010-N01-02-0169
NJSDA# PA-0006-C04
DCA# OLCEHPC-05--013 ERU# 6095-05
ADDRESS
NJ SDA
1 WEST STATE STREET
TRENTON, NEW JERSEY

PROJECT NO.: 2012-213.00

ISSUED
05/15/09 ISSUED FOR BID
07/06/09 ISSUED FOR BID
08/06/09 DCA REVIEW COMMENTS
09/01/09 ADDENDUM #4 △5
12/18/09 IT REVISIONS
△9 12/17/12 SDA AMENDMENTS 11 & 12
△10 3/25/13 ADDENDUM NO. 2

DRAWING TITLE
ELECTRICAL
PANEL SCHEDULES

DRAWING No.
E-11
DWG. NO. OF

Drawing name: G:\AutoCad\2002-jobs\1c02056\Electrical\E-11.dwg Plotted By: NHINKSON Mar 25, 2013 - 4:08pm

LP1A

PANEL IDENTIFICATION: SEE NOTE #1 THIS DRAWING — LP1A
LOCATION: FLOOR 1st | ROOM STORAGE | DWG E-14
VOLT. 480/277V (65 KAIC) PHASE 3 WIRE 4, 150 A MLO

BREAKER CONTROL	CKT. NO.	CIRCUIT DESCRIPTION	W/AWG	KVA	CB	Φ	CB	KVA	W/AWG	CIRCUIT DESCRIPTION	CKT. NO.	BREAKER CONTROL
TC-OFF SWITCH ON	1	CORRIDOR LTG	12	2.0	20/1	A	20/1	2.0	12	N119,N118 LTG	2	TC-OFF SWITCH ON
LOCAL CONTROL	3	N120,N121 LTG	12	2.0	20/1	B	20/1	2.0	12	N116,N117 LTG	4	LOCAL CONTROL
LOCAL CONTROL	5	N122,N123 LTG	12	2.0	20/1	C	20/1	2.0	12	N110 LTG	6	LOCAL CONTROL
LOCAL CONTROL	7	N101,N102 LTG	12	2.0	20/1	A	20/1	2.0	12	N108,N109 LTG	8	LOCAL CONTROL
LOCAL CONTROL	9	N103,N104 LTG	12	2.0	20/1	B	20/1	2.0	12	N107 LTG	10	LOCAL CONTROL
LOCAL CONTROL	11	N105,N106 LTG	12	2.0	20/1	C	20/1	2.0	12	N106 LTG	12	LOCAL CONTROL
TC-OFF SWITCH ON	13	CORRIDOR C100	12	2.0	20/1	A	20/1	2.0	12	N106 LTG	14	LOCAL CONTROL
LOCAL CONTROL	15	C114,C113 LTG	12	2.0	20/1	B	20/1	2.0	12	HEALTH SUITE C102 LTG	16	LOCAL CONTROL
LOCAL CONTROL	17	C112,C111 LTG	12	2.0	20/1	C	20/1	2.0	12	MAIN OFF C104,105 LTG	18	LOCAL CONTROL
TC/OFF PC ON	19	FLAGPOLE LIGHTING	10	.7	20/1	A	20/1	2.0	12	WKRM C109,C108 LTG	20	LOCAL CONTROL
	21	SPARE			20/1	B	20/1			SPARE	22	
	23	SPARE			20/1	C	20/1			SPARE	24	
	25	SPARE			20/1	A	20/1			SPARE	26	
	27	SPARE			20/1	B	20/1			SPARE	28	
	29	SPARE			20/1	C	20/1			SPARE	30	
	31										32	
	33										34	
	35										36	
	37										38	
	39										40	
	41										42	

CONNECTED (KVA) = 38
CONNECTED (AMPS) = 45.7

LOCAL CONTROL IS OCC SEN OR SWITCHING WITHIN ROOM. BUT CAN STILL BE CONTROLLED VIA TIME CLOCK.
PC = PHOTOCELL
TC = TIME CLOCK

SURFACE ☒
FLUSH ☐
200% NEUTRAL BUS ☒
ISOLATED GROUND BUS ☐
GROUND BUS ☒

NOTES:
1. THIS PANEL SHALL BE MFR BY SQ"D" - POWERLINK G3 1000 LEVEL SYSTEM ALL CB'S TO HAVE RELAY CONTROL ALSO EACH CB TO HAVE TIME CLOCK CONTROL IF NEEDED.

LP1B

PANEL IDENTIFICATION: SEE NOTE #1 THIS DRAWING — LP1B
LOCATION: FLOOR 1st | ROOM STORAGE | DWG E-14
VOLT. 480/277V (65 KAIC) PHASE 3 WIRE 4, 150 A MLO

BREAKER CONTROL	CKT. NO.	CIRCUIT DESCRIPTION	W/AWG	KVA	CB	Φ	CB	KVA	W/AWG	CIRCUIT DESCRIPTION	CKT. NO.	BREAKER CONTROL
TC-OFF SWITCH ON	1	CORRIDOR S100 LTG	12	2.0	20/1	A	20/1	2.0	12	CAFETORIUM LTG	2	LOCAL CONTROL
LOCAL CONTROL	3	MUSIC ROOM LTG	12	2.0	20/1	B	20/1	2.0	12	CAFETORIUM LTG	4	LOCAL CONTROL
	5	SPARE			20/1	C	20/1	2.0	12	CAFETORIUM LTG	6	LOCAL CONTROL
	7	SPARE			20/1	A	20/1			SPARE	8	
TC-OFF SWITCH ON	9	GYMNASIUM LTG	12	2.0	20/1	B	20/1	3.6	12	LOCKER ROOMS	10	SWITCH ON TC-OFF
TC-OFF SWITCH ON	11	GYMNASIUM LTG	12	2.0	20/1	C	20/1	2.9	12	KITCHEN LTG	12	LOCAL CONTROL
TC-OFF SWITCH ON	13	GYMNASIUM LTG	12	2.0	20/1	A	20/1	2.7	12	STAGE/LOUNGE	14	LOCAL CONTROL
	15	SPARE			20/1	B	20/1			SPARE	16	
	17	SPARE			20/1	C	20/1			SPARE	18	
	19	SPARE			20/1	A	20/1			SPARE	20	
	21	SPARE			20/1	B	20/1			SPARE	22	
	23	SPARE			20/1	C	20/1			SPARE	24	
	25	SPARE			20/1	A	20/1			SPARE	26	
	27	SPARE			20/1	B	20/1			SPARE	28	
	29	SPARE			20/1	C	20/1			SPARE	30	
	31										32	
	33										34	
	35										36	
	37										38	
	39										40	
	41										42	

CONNECTED (KVA) = 25.2
CONNECTED (AMPS) = 30.3

LOCAL CONTROL IS OCC SEN OR SWITCHING WITHIN ROOM. BUT CAN STILL BE CONTROLLED VIA TIME CLOCK.
PC = PHOTOCELL
TC = TIME CLOCK

SURFACE ☒
FLUSH ☐
200% NEUTRAL BUS ☒
ISOLATED GROUND BUS ☐
GROUND BUS ☒

NOTES:
1. THIS PANEL SHALL BE MFR BY SQ"D" - POWERLINK G3 1000 LEVEL SYSTEM ALL CB'S TO HAVE RELAY CONTROL ALSO EACH CB TO HAVE TIME CLOCK CONTROL IF NEEDED.

LP2

PANEL IDENTIFICATION: SEE NOTE #1 THIS DRAWING — LP2
LOCATION: FLOOR 1st | ROOM STORAGE | DWG E-14
VOLT. 480/277V (65 KAIC) PHASE 3 WIRE 4, 150 A MLO

BREAKER CONTROL	CKT. NO.	CIRCUIT DESCRIPTION	W/AWG	KVA	CB	Φ	CB	KVA	W/AWG	CIRCUIT DESCRIPTION	CKT. NO.	BREAKER CONTROL
TC-OFF SWITCH ON	1	2ND FLR CORR. LTG	12	2.0	20/1	A	20/1	2.0	12	CLASSROOM N218,N219	2	LOCAL CONTROL
LOCAL CONTROL	3	CLASSROOM N220,N221	12	2.0	20/1	B	20/1	2.0	12	CLASSROOM N216,N217	4	LOCAL CONTROL
LOCAL CONTROL	5	CLASSROOM N222,N223,N224	12	2.0	20/1	C	20/1	2.0	12	CLASSROOM N209,N208	6	LOCAL CONTROL
LOCAL CONTROL	7	CLASSROOM N201,N202	12	2.0	20/1	A	20/1	2.0	12	CLASSROOM N206,N207	8	LOCAL CONTROL
LOCAL CONTROL	9	CLASSROOM N203,N204	12	2.0	20/1	B	20/1	2.0	12	CLASSROOM C208,C207	10	LOCAL CONTROL
LOCAL CONTROL	11	CLASSROOM N205	12	2.0	20/1	C	20/1	2.0	12	CLASSROOM C206,C206-1	12	LOCAL CONTROL
TC-OFF SWITCH ON	13	CORRIDOR C200	12	2.0	20/1	A	20/1	2.0	12	CLSRM C205,C205-1,C205-2	14	LOCAL CONTROL
LOCAL CONTROL	15	CLASSROOM C202,C202-1	12	2.0	20/1	B	20/1			SPARE	16	
LOCAL CONTROL	17	CLASSROOM C203	12	2.0	20/1	C	20/1			SPARE	18	
LOCAL CONTROL	19	CLASSROOM C204	12	2.0	20/1	A	20/1			SPARE	20	
	21	SPARE			20/1	B	20/1			SPARE	22	
	23	SPARE			20/1	C	20/1			SPARE	24	
	25	SPARE			20/1	A	20/1			SPARE	26	
	27	SPARE			20/1	B	20/1			SPARE	28	
	29	SPARE			20/1	C	20/1			SPARE	30	
	31										32	
	33										34	
	35										36	
	37										38	
	39										40	
	41										42	

CONNECTED (KVA) = 34
CONNECTED (AMPS) = 40.9

LOCAL CONTROL IS OCC SEN OR SWITCHING WITHIN ROOM. BUT CAN STILL BE CONTROLLED VIA TIME CLOCK.
PC = PHOTOCELL
TC = TIME CLOCK

SURFACE ☒
FLUSH ☐
200% NEUTRAL BUS ☒
ISOLATED GROUND BUS ☐
GROUND BUS ☒

NOTES:
1. THIS PANEL SHALL BE MFR BY SQ"D" - POWERLINK G3 1000 LEVEL SYSTEM ALL CB'S TO HAVE RELAY CONTROL ALSO EACH CB TO HAVE TIME CLOCK CONTROL IF NEEDED.

LPB

PANEL IDENTIFICATION: SEE NOTE #1 THIS DRAWING — LPB
LOCATION: FLOOR 1st | ROOM STORAGE | DWG E-14
VOLT. 480/277V (65 KAIC) PHASE 3 WIRE 4, 100 A MLO

BREAKER CONTROL	CKT. NO.	CIRCUIT DESCRIPTION	W/AWG	KVA	CB	Φ	CB	KVA	W/AWG	CIRCUIT DESCRIPTION	CKT. NO.	BREAKER CONTROL
TC-OFF SWITCH ON	1	CORRIDOR LTG	12	2.0	20/1	A	20/1	2.0	12	N119,N118 LTG	2	TC-OFF SWITCH ON
TC/OFF PC ON	3	EXTERIOR PARKING LOT LTG	8	1.2	20/1	B	20/1	2.0	12	N116,N117 LTG	4	LOCAL CONTROL
TC/OFF PC ON	5	EXTERIOR PARKING LOT LTG	8	2.5	20/1	C	20/1	.8	8	EXTERIOR BUILDING LTG	6	TC/OFF PC ON
TC/OFF PC ON	7	BRIDGE LIGHTING	8	1.2	20/1	A	20/1	1.0	8	EXTERIOR BUILDING LTG	8	TC/OFF PC ON
LOCAL CONTROL	9	SPARE			20/1	B	20/1			SPARE	10	
LOCAL CONTROL	11	SPARE			20/1	C	20/1			SPARE	12	
TC-OFF SWITCH ON	13	SPARE			20/1	A	20/1			SPARE	14	
LOCAL CONTROL	15	SPARE			20/1	B	20/1			SPARE	16	
	17	SPACE				C				SPACE	18	
	19	SPACE				A				SPACE	20	

CONNECTED (KVA) = 10.2
CONNECTED (AMPS) = 12.2

LOCAL CONTROL IS OCC SEN OR SWITCHING WITHIN ROOM. BUT CAN STILL BE CONTROLLED VIA TIME CLOCK.
PC = PHOTOCELL
TC = TIME CLOCK

SURFACE ☒
FLUSH ☐
200% NEUTRAL BUS ☒
ISOLATED GROUND BUS ☐
GROUND BUS ☒

NOTES:
1. THIS PANEL SHALL BE MFR BY SQ"D" - POWERLINK G3 1000 LEVEL SYSTEM ALL CB'S TO HAVE RELAY CONTROL ALSO EACH CB TO HAVE TIME CLOCK CONTROL IF NEEDED.

PP1 SECT 1

PANEL IDENTIFICATION: PP1 SECT 1
LOCATION: FLOOR 1 | ROOM ELEC | DWG E-14
VOLT. 280/120V (22 KAIC) PHASE 3 WIRE 4, 400 A MCB

CKT. NO.	CIRCUIT DESCRIPTION	W/AWG	KVA	CB	Φ	CB	KVA	W/AWG	CIRCUIT DESCRIPTION	CKT. NO.
1	GRADE 4	12	1.1	20/1	A	20/1	1.1	12	GRADE 3	2
3	GRADE 4	12	1.1	20/1	B	20/1	1.1	12	GRADE 3	4
5	GRADE 4	12	1.1	20/1	C	20/1	1.1	12	GRADE 3	6
7	SPEC. ED.	12	1.1	20/1	A	20/1	.9	12	SPEC. ED	8
9	SGI	12	.9	20/1	B	20/1	.5	12	STORAGE/ELEC	10
11	GRADE 2	12	1.1	20/1	C	20/2	2.3	12	HAND DRYER	12
13	GRADE 2	12	1.1	20/1	A					14
15	GRADE 2	12	1.1	20/1	B	20/2	2.3	12	HAND DRYER	16
17	GRADE 1	12	1.3	20/1	C					18
19	GRADE 1	12	1.1	20/1	A	20/2	2.3	12	HAND DRYER	20
21	GRADE 1	12	1.3	20/1	B					22
23	GRADE 1	12	1.1	20/1	C	20/2	2.3	12	HAND DRYER	24
25	SGI	12	1.1	20/1	A					26
27	HAND DRYER	12	2.3	20/2	B	20/2	2.3	12	HAND DRYER	28
29					C					30
31	HAND DRYER	12	2.3	20/2	A	20/2	2.3	12	HAND DRYER	32
33					B					34
35	HAND DRYER	12	2.3	20/2	C	20/1	0.4	12	ROOF RECEPTACLES	36
37					A	150/3	26.5	1/0	FEED FOR PANEL PP1A	38
39	HAND DRYER	12	2.3	20/2	B					40
41					C					42

CONNECTED (KVA) = 67.1
CONNECTED (AMPS) = 186.2

SURFACE ☒
FLUSH ☐
200% NEUTRAL BUS ☐
ISOLATED GROUND BUS ☐
GROUND BUS ☒

PP1 SECT 2

PANEL IDENTIFICATION: PP1 SECT 2
LOCATION: FLOOR 1 | ROOM ELEC | DWG E-14
VOLT. 280/120V (22 KAIC) PHASE 3 WIRE 4, 400 A MLO

CKT. NO.	CIRCUIT DESCRIPTION	W/AWG	KVA	CB	Φ	CB	KVA	W/AWG	CIRCUIT DESCRIPTION	CKT. NO.
43	SPARE			20/1	A	20/1			SPARE	44
45	SPARE			20/1	B	20/1			SPARE	46
47	SPARE			20/1	C	20/1			SPARE	48
49	SPARE			20/1	A	20/1			SPARE	50
51	SPARE			20/1	B	20/1			SPARE	52
53	SPARE			20/1	C	20/1			SPARE	54
55	SPARE			20/1	A	20/1			SPARE	56
57	SPARE			20/1	B	20/1			SPARE	58
59	SPARE			20/1	C	20/1			SPARE	60
61	SPARE			20/1	A	20/1			SPARE	62
63	SPARE			20/1	B	20/1			SPARE	64
65	SPARE			20/1	C	20/1			SPARE	66
67	SPARE			20/1	A	20/1			SPARE	68
69	SPARE			20/1	B	20/1			SPARE	70
71	SPARE			20/1	C	20/1			SPARE	72
73	SPACE				A				SPACE	74
75	SPACE				B				SPACE	76
77	SPACE				C				SPACE	78
79	SPACE				A				SPACE	80
81	SPACE				B				SPACE	82
83	SPACE				C				SPACE	84

CONNECTED (KVA) = 0.0
CONNECTED (AMPS) = 0.0

SURFACE ☒
FLUSH ☐
200% NEUTRAL BUS ☐
ISOLATED GROUND BUS ☐
GROUND BUS ☒

PP1A

PANEL IDENTIFICATION: PP1A
LOCATION: FLOOR 1 | ROOM ELEC | DWG
VOLT. 208/120V (22 KAIC) PHASE 3 WIRE 4, 225 A MLO

CKT. NO.	CIRCUIT DESCRIPTION	W/AWG	KVA	CB	Φ	CB	KVA	W/AWG	CIRCUIT DESCRIPTION	CKT. NO.
1	CLRM./KINDERG.	12	.9	20/1	A	20/1	.8	12	CONF. ROOM	2
3	CLRM./KINDERG.	12	.9	20/1	B	20/1	.8	12	CONF. ROOM	4
5	CLRM./KINDERG.	12	.9	20/1	C	20/1	.9	12	OFFICE	6
7	CLRM./KINDERG.	12	.9	20/1	A	20/1	.9	12	OFFICE	8
9	CLRM./KINDERG.	12	.9	20/1	B	20/1	.7	12	OFFICE	10
11	CLRM./KINDERG.	12	.9	20/1	C	20/1	1.1	12	OFFICE	12
13	GUIDANCE	12	1.1	20/1	A	20/1	.9	12	CST	14
15	GUIDANCE	12	.7	20/1	B	20/1	.7	12	HEALTH	16
17	GUIDANCE	12	.5	20/1	C	20/1	.8	12	HEALTH REFRIG	18
19	HEALTH	12	.5	20/1	A	20/1	.9	12	MEDIA CENTER	20
21	MEDIA CENTER	12	1.1	20/1	B	20/1	.7	12	MEDIA CENTER	22
23	COPIER	12	.8	20/1	C	20/1	.8	12	DISPLAY CASE	24
25	COPIER	12	.8	20/2	A	20/1	.8	12	DISPLAY CASE	26
27					B	20/1	.8	12	WATER COOLER	28
29	PUMP	12	2.4	20/3	C	20/1	.8	12	WATER COOLER	30
31					A	20/1	.8	12	WATER COOLER	32
33					B	20/1			SPARE	34
35	SPARE			20/1	C	20/1			SPARE	36
37	SPARE			20/1	A	20/1			SPARE	38
39	SPARE			20/1	B	20/1			SPARE	40
41	SPARE			20/1	C	20/1			SPARE	42

CONNECTED (KVA) = 26.5
CONNECTED (AMPS) = 73.5

SURFACE ☒
FLUSH ☐
200% NEUTRAL BUS ☐
ISOLATED GROUND BUS ☐
GROUND BUS ☒

CP1

PANEL IDENTIFICATION: CP1
LOCATION: FLOOR 1 | ROOM ELEC | DWG E-14
VOLT. 208/120V (22 KAIC) PHASE 3 WIRE 4, 225 A MCB

CKT. NO.	CIRCUIT DESCRIPTION	W/AWG	KVA	CB	Φ	CB	KVA	W/AWG	CIRCUIT DESCRIPTION	CKT. NO.
1	GRADE 4	12	1.2	20/1	A	20/1	1.2	12	GRADE 3	2
3	GRADE 4	12	1.2	20/1	B	20/1	1.2	12	GRADE 3	4
5	GRADE 4	12	1.2	20/1	C	20/1	1.2	12	GRADE 3	6
7	GRADE 4	12	1.2	20/1	A	20/1	1.2	12	GRADE 3	8
9	GRADE 4	12	1.2	20/1	B	20/1	1.2	12	GRADE 3	10
11	GRADE 4	12	1.2	20/1	C	20/1	1.2	12	GRADE 3	12
13	SPEC. ED.	12	1.2	20/1	A	20/1	1.2	12	SPEC. ED.	14
15	SPEC. ED.	12	1.2	20/1	B	20/1	1.2	12	SPEC. ED.	16
17	SGI	12	1.5	20/1	C	20/1	1.2	12	SGI	18
19	SGI	12	.9	20/1	A	20/1	1.2	12	SGI	20
21	GRADE 1	12	1.2	20/1	B	20/1	1.2	12	GRADE 2	22
23	GRADE 1	12	1.2	20/1	C	20/1	1.2	12	GRADE 2	24
25	GRADE 1	12	1.2	20/1	A	20/1	1.2	12	GRADE 2	26
27	GRADE 1	12	1.2	20/1	B	20/1	1.2	12	GRADE 2	28
29	GRADE 1	12	1.2	20/1	C	20/1	1.2	12	GRADE 2	30
31	GRADE 1	12	1.2	20/1	A	20/1	1.2	12	GRADE 2	32
33	GRADE 1	12	1.2	20/1	B	20/1	1.2	12	SGI	34
35	GRADE 1	12	1.2	20/1	C	20/1	.8	12	TECH CL (*)	36
37	TECH CL (*)	12	.8	20/1	A	150/3	26.0	1/0	FEED FOR PANEL CP1A	38
39	TECH CL (*)	12	.8	20/1	B					40
41	TECH CL (*)	12	.8	20/1	C					42

CONNECTED (KVA) = 84.4
CONNECTED (AMPS) = 233.8
(*) - INDICATES ISOLATED GROUND CIRCUIT
REQUIREMENTS:
20 AMP CIRCUIT: 2#12,1#12G.,1#12IG.,3/4"C
30 AMP CIRCUIT: 2#10,1#10G.,1#10IG.,3/4"C

SURFACE ☒
FLUSH ☐
200% NEUTRAL BUS ☒
ISOLATED GROUND BUS ☒
GROUND BUS ☒

CP1A

PANEL IDENTIFICATION: CP1A
LOCATION: FLOOR 1 | ROOM ELEC. | DWG E-14
VOLT. 208/120V (22 KAIC) PHASE 3 WIRE 4, 225 A MLO

CKT. NO.	CIRCUIT DESCRIPTION	W/AWG	KVA	CB	Φ	CB	KVA	W/AWG	CIRCUIT DESCRIPTION	CKT. NO.
1	CLRM./KINDERG.	12	1.2	20/1	A	20/1	.8	12	CONF. ROOM	2
3	SPARE			20/1	B	20/1	.5	12	OFFICE	4
5	CLRM./KINDERG.	12	1.2	20/1	C	20/1	.5	12	OFFICE	6
7	SPARE			20/1	A	20/1	.8	12	IDF (*)	8
9	CLRM./KINDERG.	12	1.2	20/1	B	30/1	.8	10	IDF (*)	10
11	SPARE			20/1	C	20/1	.7	12	GUIDANCE	12
13	CLRM./KINDERG.	12	1.2	20/1	A	20/1	.5	12	GUIDANCE/HEALTH	14
15	HEALTH	12	.4	20/1	B	20/1	.7	12	MAIN OFFICE	16
17	SECURITY OFFICE	12	.4	20/1	C	20/1	.7	12	MEDIA CENTER	18
19	MEDIA CENTER	12	.7	20/1	A	20/1	.7	12	MEDIA CENTER	20
21	MEDIA CENTER	12	.7	20/1	B	20/1	.7	12	MEDIA CENTER	22
23	MEDIA CENTER	12	.7	20/1	C	20/1	.7	12	MEDIA CENTER	24
25	MEDIA CENTER	12	.7	20/1	A	20/1	.8	12	IDF (*)	26
27	IDF (*)	12	.8	20/1	B	30/1	.8	10	IDF (*)	28
29	IDF (*)	12	.8	20/1	C	20/1	.8	12	IDF (*)	30
31	IDF (*)	10	.8	30/1	A	20/1	.7	12	MEDIA CENTER	32
33	TECH CLOSET (*)	10	.8	30/1	B	20/1	.8	12	MEDIA CENTER	34
35	TECH CLOSET (*)	10	.8	30/1	C	20/1	.8	12	AV WORKROOM	36
37	TECH CLOSET (*)	10	.8	30/1	A	20/1			SPARE	38
39	MEDIA CENTER	12	.8	20/1	B	20/1			SPARE	40
41	TECH CLOSET (*)	12	.8	20/1	C	20/1			SPARE	42

CONNECTED (KVA) = 29.0
CONNECTED (AMPS) = 80.5
(*) - INDICATES ISOLATED GROUND CIRCUIT
REQUIREMENTS:
20 AMP CIRCUIT: 2#12,1#12G.,1#12IG.,3/4"C
30 AMP CIRCUIT: 2#10,1#10G.,1#10IG.,3/4"C

SURFACE ☒
FLUSH ☐
200% NEUTRAL BUS ☒
ISOLATED GROUND BUS ☒
GROUND BUS ☒

PP2

PANEL IDENTIFICATION: PP2
LOCATION: FLOOR 2 | ROOM ELEC | DWG E-14
VOLT. 208/120V (22 KAIC) PHASE 3 WIRE 4, 400 A MCB

CKT. NO.	CIRCUIT DESCRIPTION	W/AWG	KVA	CB	Φ	CB	KVA	W/AWG	CIRCUIT DESCRIPTION	CKT. NO.
1	SPEC. ED.	12	1.1	20/1	A	20/1	1.1	12	WORLD LANGUAGE	2
3	SGI	12	.7	20/1	B	20/1	.7	12	SGI	4
5	SPEC. ED.	12	1.1	20/1	C	20/1	.7	12	ELEC ROOM/ CUSTODIAN	6
7	GRADE 6	12	1.1	20/1	A	20/1	1.1	12	GRADE 7	8
9	GRADE 8	12	1.1	20/1	B	20/1	.6	12	COMP. TECH	10
11	GRADE 8	12	1.1	20/1	C	20/1	1.1	12	GRADE 7	12
13	SGI	12	.9	20/1	A	20/1	.7	12	SGI	14
15	SGI	12	.9	20/1	B	20/1	.9	12	SGI	16
17	GRADE 5	12	.9	20/1	C	20/1	1.1	12	GRADE 5	18
19	GRADE 5	12	.9	20/1	A	20/1	.7	12	GRADE 5	20
21	SPEC. ED.	12	.9	20/1	B	20/1	.7	12	SCIENCE DEMO	22
23	SCIENCE DEMO	12	1.1	20/1	C	20/1	.7	12	SCIENCE DEMO	24
25	SCIENCE DEMO	12	.8	20/1	A	20/1	1.1	12	CORRIDOR	26
27	SCIENCE DEMO	12	.8	20/1	B	20/1	.8	12	SCIENCE DEMO	28
29	SPECIAL ED.	12	.7	20/1	C	20/1	.8	12	SCIENCE DEMO	30
31	TECH ED.	12	1.1	20/1	A	20/1	.4	12	SCIENCE DEMO REC	32
33	205/06 RECEPT	12	1.2	20/1	B	20/1	.9	12	ART	34
35	WATER COOLER	12	.8	20/1	C	20/1	.8	12	DISPLAY CASE	36
37	SPARE			20/1	A	225/3	62.4	4/0	FEED FOR PANEL PP2A	38
39	EPO ENCLOSURE SOLENOID	12	.4	20/1	B					40
41	SPARE			20/1	C					42

CONNECTED (KVA) = 94.9
CONNECTED (AMPS) = 263.4

SURFACE ☒
FLUSH ☐
200% NEUTRAL BUS ☐
ISOLATED GROUND BUS ☐
GROUND BUS ☒

PP2 SECT 2

PANEL IDENTIFICATION: PP2 SECT 2
LOCATION: FLOOR 1 | ROOM ELEC | DWG E-14
VOLT. 280/120V (22 KAIC) PHASE 3 WIRE 4, 400 A MLO

CKT. NO.	CIRCUIT DESCRIPTION	W/AWG	KVA	CB	Φ	CB	KVA	W/AWG	CIRCUIT DESCRIPTION	CKT. NO.
43	FUT RADON FAN-1	12	1.0	20/1	A	20/1			SPARE	44
45	FUT RADON FAN-2	12	1.0	20/1	B	20/1	1.0	12	FUT RADON FAN-5	46
47	FUT RADON FAN-3	12	1.0	20/1	C	20/1	1.0	12	EWC UNIT - 1	48
49	C203 RECEPT 1	12	0.6	20/1	A	20/1	1.0	12	EWC UNIT - 2	50
51	C203 RECEPT 2	12	0.6	20/1	B	20/1	0.4	12	C204-1 RECEPT 1	52
53	C203 COPY RECEPT 1	12	1.0	20/1	C	20/1	0.4	12	C204-1 RECEPT 1	54
55	C203 COPY RECEPT 2	10	2.5	30/2	A	20/1	0.5	12	C202 TABLE 1	56
57					B	20/1	0.5	12	C202 TABLE 2	58
59	EF-2 (ROOF - FH)	12	0.7	20/1	C	20/1	0.5	12	C202 TABLE 3	60
61	KILN RECEPT	8	10.9	40/3	A	20/1	0.5	12	C202 TABLE 4	62
63					B	20/1	0.5	12	C202 TABLE 5	64
65					C	20/1	0.5	12	C202 TABLE 6	66
67	SPARE			20/1	A	20/1			SPARE	68
69	SPARE			20/1	B	20/1			SPARE	70
71	SPARE			20/1	C	20/1			SPARE	72
73	SPACE				A				SPACE	74
75	SPACE				B				SPACE	76
77	SPACE				C				SPACE	78
79	SPACE				A				SPACE	80
81	SPACE				B				SPACE	82
83	SPACE				C				SPACE	84

CONNECTED (KVA) = 23.1
CONNECTED (AMPS) = 64.1

SURFACE ☒
FLUSH ☐
200% NEUTRAL BUS ☐
ISOLATED GROUND BUS ☐
GROUND BUS ☒

PP2A

PANEL IDENTIFICATION: PP2A
LOCATION: FLOOR 2 | ROOM ELEC. | DWG E-14
VOLT. 208/120V (22 KAIC) PHASE 3 WIRE 4, 225 A MLO

CKT. NO.	CIRCUIT DESCRIPTION	W/AWG	KVA	CB	Φ	CB	KVA	W/AWG	CIRCUIT DESCRIPTION	CKT. NO.
1	HAND DRYER	12	2.3	20/2	A	20/2	2.3	12	HAND DRYER	2
3					B					4
5	HAND DRYER	12	2.3	20/2	C	20/2	2.3	12	HAND DRYER	6
7					A					8
9	RECEPTACLE	12	.9	20/1	B	20/1	.8	12	SCIENCE DEMO	10
11	HAND DRYER	12	2.3	20/2	C	20/1	.8	12	SCIENCE DEMO	12
13					A	20/1	.8	12	SCIENCE DEMO	14
15	HAND DRYER	12	2.3	20/2	B	20/1	.8	12	FUME HOOD	16
17					C	20/1	.8	12	SCIENCE DEMO	18
19	C206 RECEPT	12	.6	20/1	A	20/1	.8	12	SCIENCE DEMO	20
21	SPARE			20/1	B	20/1	.8	12	SCIENCE DEMO	22
23	SPARE			20/1	C	20/1	.8	12	FUME HOOD	24
25	SPARE			20/1	A	20/1	.5	12	C207 TABLE 5	26
27	SPARE			20/1	B	20/1	.5	12	C207 TABLE 6	28
29	SPARE			20/1	C	20/1	.6	12	C207 EPO	30
31	SPARE			20/1	A	20/1	.4	12	C207 RECEPTACLE	32
33	SPARE			20/1	B	20/1	.5	12	C207 FUME HOOD	34
35	C207 TABLE 1	12	.5	20/1	C	20/1			SPARE	36
37	C207 TABLE 2	12	.5	20/1	A	30/1	.8	10	WASHER / DRYER	38
39	C207 TABLE 3	12	.5	20/1	B	20/1	.4	12	DISPLAY CASE	40
41	C207 TABLE 4	12	.5	20/1	C	20/1	.4	12	N215 RECEPTACLE	42

CONNECTED (KVA) = 62.4
CONNECTED (AMPS) = 173.2

SURFACE ☒
FLUSH ☐
200% NEUTRAL BUS ☐
ISOLATED GROUND BUS ☐
GROUND BUS ☒

CP2

PANEL IDENTIFICATION: CP2
LOCATION: FLOOR 2 | ROOM ELEC | DWG E-14
VOLT. 208/120V (22 KAIC) PHASE 3 WIRE 4, 225 A MCB

CKT. NO.	CIRCUIT DESCRIPTION	W/AWG	KVA	CB	Φ	CB	KVA	W/AWG	CIRCUIT DESCRIPTION	CKT. NO.
1	GRADE 5	12	1.2	20/1	A	20/1	1.2	12	GRADE 5	2
3	GRADE 5	12	1.2	20/1	B	20/1	1.2	12	GRADE 5	4
5	SGI	12	1.5	20/1	C	20/1	1.5	12	SGI	6
7	SGI	12	1.5	20/1	A	20/1	1.5	12	SGI	8
9	SPEC. ED	12	1.2	20/1	B	20/1	1.2	12	SPEC. ED	10
11	TECH CLO.	12	.8	20/1	C	20/1	1.2	12	GRADE 6	12
13	GRADE 6	12	1.2	20/1	A	20/1	1.2	12	GRADE 6	14
15	GRADE 6	12	1.2	20/1	B	20/1	1.2	12	GRADE 7	16
17	GRADE 7	12	1.2	20/1	C	20/1	1.2	12	COMPUTER TECH.	18
19	COMPUTER TECH.	12	1.2	20/1	A	20/1	1.2	12	GRADE 8	20
21	GRADE 8	12	1.2	20/1	B	20/1	1.5	12	GRADE 8	22
23	GRADE 8	12	1.2	20/1	C	20/1	1.5	12	SGI	24
25	SGI	12	1.2	20/1	A	20/1	1.5	12	SGI	26
27	SGI	12	1.2	20/1	B	20/1	1.2	12	SPECIAL ED.	28
29	SPECIAL ED.	12	1.2	20/1	C	20/1	1.2	12	GRADE 5	30
31	GRADE 5	12	1.2	20/1	A	20/1	1.2	12	GRADE 5	32
33	GRADE 5	12	1.2	20/1	B	20/1	1.2	X	GRADE 5	34
35	GRADE 5	12	1.2	20/1	C	20/1	.8	12	TECH CLO.	36
37	GRADE 7	12	1.2	20/1	A	150/3	34.8	1/0	FEED FOR PANEL CP2A	38
39	GRADE 7	12	1.2	20/1	B					40
41	SPARE			20/1	C					42

CONNECTED (KVA) = 93.7
CONNECTED (AMPS) = 259.6

SURFACE ☒
FLUSH ☐
200% NEUTRAL BUS ☒
ISOLATED GROUND BUS ☒
GROUND BUS ☒

CP2A

PANEL IDENTIFICATION: CP2A
LOCATION: FLOOR 2 | ROOM ELEC | DWG E-14
VOLT. 208/120V (22 KAIC) PHASE 3 WIRE 4, 150 A MLO

CKT. NO.	CIRCUIT DESCRIPTION	W/AWG	KVA	CB	Φ	CB	KVA	W/AWG	CIRCUIT DESCRIPTION	CKT. NO.
1	SPEC. ED.	12	1.5	20/1	A	20/1	.9	12	SPEC. ED.	2
3	SPEC. ED.	12	1.2	20/1	B	20/1	1.2	12	SPEC. ED.	4
5	C207 SCIENCE DEMO 1	12	1.2	20/1	C	20/1	1.2	12	C207 SCIENCE DEMO 2	6
7	ART	12	1.2	20/1	A	20/1	1.2	12	ART	8
9	SCIENCE DEMO	12	1.2	20/1	B	20/1	.9	12	N205	10
11	SCIENCE DEMO	12	1.2	20/1	C	20/1	.9	12	N205	12
13	SCIENCE DEMO	12	1.2	20/1	A	20/1	.9	12	N205	14
15	SCIENCE DEMO	12	1.2	20/1	B	20/1	.9	12	N205	16
17	SCIENCE DEMO	12	1.2	20/1	C	20/1	.9	12	N205	18
19	SPECIAL ED.	12	.9	20/1	A	20/1	.9	12	N205	20
21	TECHNOLGY ED.	12	.9	20/1	B	20/1	.9	12	N205	22
23	TECHNOLGY ED.	12	.9	20/1	C	20/1	.9	12	N205	24
25	TECHNOLGY ED.	12	.9	20/1	A	20/1	.8	12	N125 RECEPTACLE	26
27	TECHNOLGY ED.	12	.9	20/1	B	20/1	.8	12	TECH CLOSET	28
29	TECHNOLGY ED.	12	.9	20/1	C	20/1	.8	12	TECH CLOSET	30
31	TECHNOLGY ED.	12	.9	20/1	A	20/1	.8	12	TECH CLOSET	32
33	TECHNOLGY ED.	12	.9	20/1	B	20/1	.8	12	TECH CLOSET	34
35	TECH CLOSET	12	.8	20/1	C	20/1	.8	12	C203 RECEPT-1	36
37	SPARE			20/1	A	20/1	.8	12	C203 RECEPT 2	38
39	SPARE			20/1	B	20/1			SPARE	40
41	SPARE			20/1	C	20/1			SPARE	42

CONNECTED (KVA) = 36.4
CONNECTED (AMPS) = 100.8

SURFACE ☒
FLUSH ☐
200% NEUTRAL BUS ☒
ISOLATED GROUND BUS ☒
GROUND BUS ☒

SDA
NJ SCHOOLS DEVELOPMENT AUTHORITY

STATE OF NEW JERSEY
ECONOMIC DEVELOPMENT AUTHORITY

DesignIdeasGroup
architecture + planning, llc
15 Bethany Street, New Brunswick, NJ 08901, T: 732.249.6242, F: 732.247.1825
142 West 36th Street, New York, NY 10018, T: 645.584.8419

Richard D. Alderiso, AIA — NJ RA AI 15023 NY RA 027416
Vincent A. Myers, AIA — NJ RA AI 11415
Jeffrey D. Venezia, AIA — NJ RA AI 08271 NY RA 023719-1
Warren W. Winter, AIA — NJ RA AI 06853 NY RA 010562-1

CONCORD ENGINEERING
P.A. 24GA27936700
520 South Burnt Mill Road
Voorhees, New Jersey 08043
(856) 427-0200
www.concord-engineering.com

CONSTRUCTION PROGRAM FOR THE
MARSHALL STREET ELEMENTARY SCHOOL
DOE# 4010-N01-02-0169
NJSDA# PA-0006-C04
DCA# OLCEHPC-05--013 ERU# 6095-05
ADDRESS
NJ SDA
1 WEST STATE STREET
TRENTON, NEW JERSEY

PROJECT NO.: 2012-213.00

ISSUED
- 05/15/09 ISSUED FOR BID
- 07/06/09 ISSUED FOR BID
- 08/06/09 DCA REVIEW COMMENTS
- 09/01/09 ADDENDUM #4 (4)
- 12/18/09 IT REVISIONS (5)
- 02/22/10 RADON REVISIONS (6)
- 05/14/10 DCA RESUBMISSION
- (9) 12/17/12 SDA AMENDMENTS 11 & 12
- (10) 3/25/13 ADDENDUM NO. 2

DRAWING TITLE
ELECTRICAL
PANEL SCHEDULES

DRAWING No.
E-9
DWG. NO. OF

Drawing name: G:\AutoCad\2002-jobs\1c02056\Electrical\E-9.dwg Plotted By: NHINKSON Mar 25, 2013 - 4:08pm

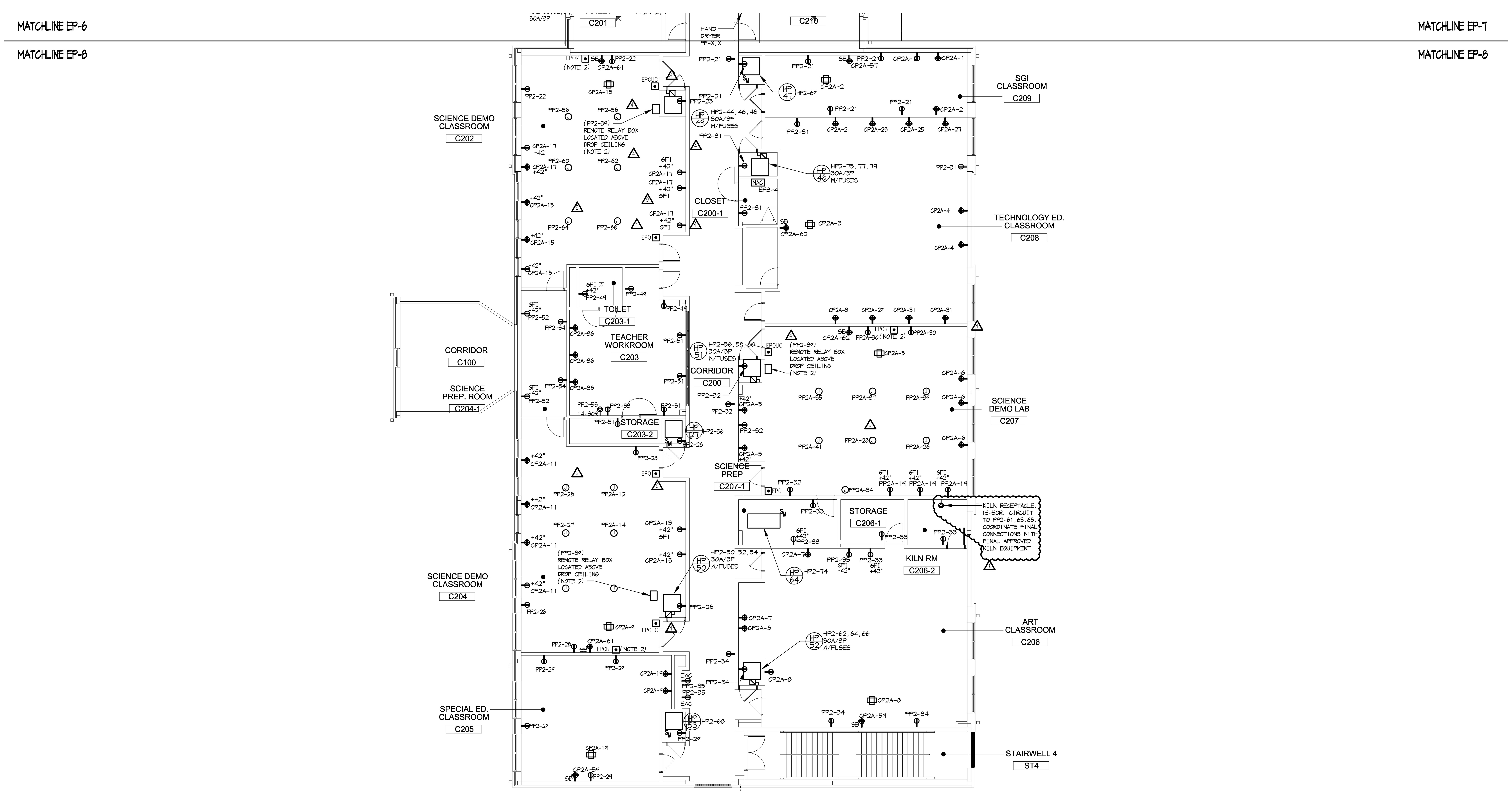

GENERAL ELECTRICAL NOTES:

1. PROVIDE A COMPLETE CONDUIT AND BACKBOX SYSTEM AS REQUIRED FOR THE DATA/VOICE, ACCESS CONTROL, CCTV, CLOCK, INTERCOM, AND SOUND SYSTEMS. REFER TO THE 'T' SERIES DRAWINGS FOR REQUIRED CONDUIT AND BACKBOX LOCATIONS/REQUIREMENTS FOR EACH SYSTEM.
2. PROVIDE ALL REQUIRED SLEEVES AND RISER CONDUITS FOR THE DATA/VOICE, ACCESS CONTROL, CCTV, CLOCK, INTERCOM, AND SOUND SYSTEMS. REFER TO THE 'T' SERIES DRAWINGS FOR REQUIRED SLEEVE LOCATIONS/REQUIREMENTS FOR EACH SYSTEM.
3. PROVIDE A COMPLETE CABLE TRAY SYSTEM FOR SOLE USE BY TECHNOLOGY CABLING IN ACCORDANCE WITH THE 'T' SERIES DRAWINGS. REFER TO THE 'T' SERIES DRAWINGS FOR CABLE TRAY REQUIREMENTS.
4. PROVIDE HALO GROUNDING SYSTEM IN MDF AND IDF ROOMS. REFER TO THE 'T' SERIES DRAWINGS FOR REQUIREMENTS.
5. CONDUITS FOR ALL SYSTEMS SHALL EXTEND FROM 6" ABOVE NEAREST ACCESSSIBLE CEILING AND TERMINATE IN A DOUBLE GANG BOX WITH SINGLE GANG FLANGE. PROVIDE GROMMETS ON ALL OPEN CONDUIT ENDS.
6. FIRESTOP ALL CONDUITS/RACEWAYS PENETRATING FIRE RATED PARTITIONS, WALLS, FLOORS, AND CEILINGS. SEAL USING APPROVED FIRE RATED SEALANT TO MAINTAIN THE FIRE RATING OF THE PARTITION, WALL, FLOOR, OR CEILING AT THE PENETRATION. COORDINATE ALL FIRE RATED PARTITIONS, WALLS, FLOORS, AND CEILINGS WITH THE ARCHITECTURAL DRAWINGS AND SUBMIT UL APPROVED METHODS FOR FIRESTOPPING AT EACH SPECIFIC LOCATION.

1 / EP-8 PARTIAL SECOND FLOOR POWER PLAN

SCALE: 1/8" = 1'-0"

ALL WORK SHOWN IS THE RESPONSIBILITY OF THE ELECTRICAL CONTRACTOR, UNLESS NOTED OTHERWISE.

NOTES:

1. REFER TO DRAWING E-1 FOR SYMBOLS, NOTES AND LEGENDS.
2. REFER TO DETAIL 5/E-3 FOR EXACT LOCATION OF EQUIPMENT ALL APPURTENANCES NECESSARY FOR A COMPLETE INSTALLATION.

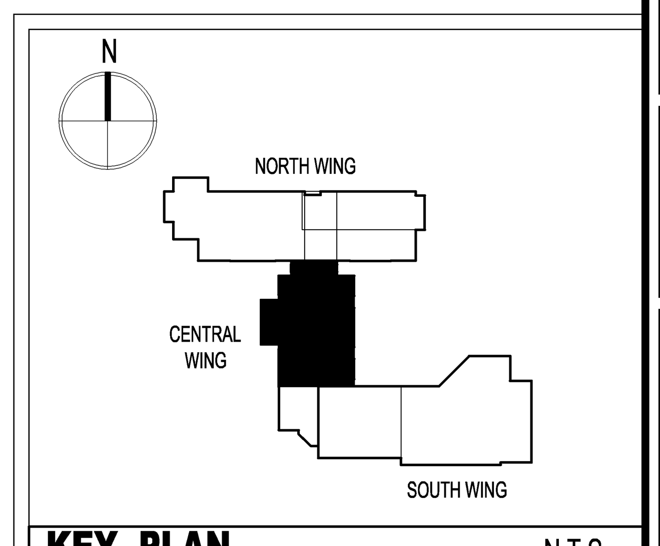

KEY PLAN N.T.S.

SDA
NJ SCHOOLS DEVELOPMENT AUTHORITY

STATE OF NEW JERSEY
ECONOMIC DEVELOPMENT AUTHORITY

DesignIdeasGroup
architecture + planning, llc
15 Bethany Street
New Brunswick, NJ 08901
T: 732.249.6242
F: 732.247.1825
142 West 36th Street
New York, NY 10018
T: 645.584.8419

Richard D. Alderiso, AIA
NJ RA AI 15023 NY RA 027416
Vincent A. Myers, AIA
NJ RA AI 11415
Jeffrey D. Venezia, AIA
NJ RA AI 08271 NY RA 023719-1
Warren W. Winter, AIA
NJ RA AI 06853 NY RA 010562-1

CONCORD ENGINEERING
P.A. 24GA27936700
520 South Burnt Mill Road
Voorhees, New Jersey 08043
(856) 427-0200
www.concord-engineering.com

CONSTRUCTION PROGRAM FOR THE
MARSHALL STREET ELEMENTARY SCHOOL
DOE# 4010-N01-02-0169
NJSDA# PA-0006-C04
DCA# OLCHPC-05-013 ERU# 6095-05
ADDRESS
NJ SDA
1 WEST STATE STREET
TRENTON, NEW JERSEY

PROJECT NO.: 2012-213.00

ISSUED
05/15/09 ISSUED FOR BID
07/06/09 ISSUED FOR BID
08/06/09 DCA REVIEW COMMENTS
09/01/09 ADDENDUM #4
05/14/10 DCA RESUBMISSION
12/17/12 SDA AMENDMENTS 11 & 12
3/25/13 ADDENDUM NO. 2

DRAWING TITLE
SECOND FLOOR PARTIAL POWER PLAN

DRAWING No.
EP-8
DWG. NO. OF

CEC, INC.

CONSULTING ENGINEERS COLLABORATIVE, INC.

OBSERVATION REPORT
For

Existing Footings and Foundation Walls
of
Marshall Street Elementary School
Paterson, New Jersey

CEC Project No. 03100B

M. Jeff Ling, P.E.

April 23, 2012
(Updated September 19, 2012)

730 BOULEVARD • KENILWORTH, NEW JERSEY • 908-298-1600 • 908-298-0702 FAX

At the request of DI Group Architecture, Carline Vales from our office, accompanied by Mr. Edward Nyzio of New Jersey School Development Authority (NJSDA), visited the above mentioned site on April 3, 2012. M. Jeff Ling, PE and Carline Vales from our office, accompanied by Mr. Edward Nyzio, revisited that site on September 12, 2012. The existing construction was terminated at mid-session of the foundation construction in 2010. The contractor was constructing the exterior wall footing at all areas. There is approximately 50% of the exterior foundation wall and footing constructed along with a limited number of interior footings.

This office prepared a consolidated foundation plan with color coded label with yellow marking which indicates the portion of foundation wall and footing construction that were completed. The pink marking indicates the location that the soil bearing capacity of the footing is questionable and requires a soil engineer to review existing soil bearing capacity. See Appendix II.

The following is the detailed description of observation on each wing:

North Wing

a) Media Center

The exterior wall footings and pier footings were poured on the North-West corner of the building. However, some of the footing bottoms are exposed to the weather. See Photo No. 1. Some of the footings were covered with construction debris. See Photo No. 2. Some vegetation was growing adjacent to the foundation. See Photo No. 3. Most of the foundation walls above those footing were installed and filled solid with concrete except at Column Line 1 (A.7-B.1), B.1 (1-1.1), 1.1 (B.1-C.2). The last course of concrete masonry block at those locations was not filled solid with concrete. See Photo No. 3. All anchor rods were rusted and some of them lost their threads. See Photo No. 4. The soil near the following wall and column footings locations must be checked for its bearing capacity:

a) Column 2-A.0
b) Column and wall on Line C.2 (from 1.1 to 1.4)
c) Columns 4-D and 5-D

b) Basement

The footings for the basement wall on the North Wing are approximately 70% complete. The steel rebars for the basement wall were erected at some areas above those footings. However, those rebars were not properly protected. See Photo No. 5. The remaining area of the basement wall footings have rebar dowels exposed and the construction joint key was filled with discolored debris. See Photo No. 6. The elevator pit area was filled with water. The footing for the elevator pit could not be verified during the observation. See Photo No. 7. It appears the soil was caved in on the East side of the basement. See Photo No. 8. The water was pumped out prior to the observation on September 12 and a layer of crushed stone was observed at the bottom of the pit. We tested the existing condition that was filled with water by poking the ground with a rebar. It appears the ground was still solid with a thin layer of mud above. See Photo 9 and 10. Before restarting the construction at this area, the existing ground must be completely dry and additional crushed stone must be laid down prior to pouring new concrete for future construction.

The existing footing formwork and fabricated rebars that are exposed at the surrounding area should be abandoned and reconstructed.

Central Wing

The foundation wall, wall footings and column footings were poured on the West side of the building. Wherever the foundation wall and footing were terminated, the rebar dowels from the footing were exposed to the weather. There are some large stone back filling adjacent to the existing walls. See Photo No. 11. The pier footings at the corner of the entrance were exposed and appeared to have some soil erosion. See Photo

No. 12. Soil erosion was observed at column footings such at Column Line 4.1 (F, F.3, F.7 and G) and Line 5.1 (H, H.4 and L.1). The soil bearing capacity on the exterior side of those columns should be verified by a soil engineer. Some footings were formed with the rebar cage, but without concrete. See Photo No. 13.

South Wing

The footings and foundation wall for the auxiliary gym was complete. However, some of the footing bottoms were exposed to the weather and soil erosion occurred adjacent to the footing. See Photo No. 14. Some of the footings at this area were not visible because of the back filling next to the existing wall. Most of those areas have vegetation adjacent to the footings. See Photo No. 15. The soil bearing should be verified by a soil engineer at the areas along the exterior side of Column Line K on Column Lines 6.6, 7.5 and 8.2. See Photos 16 and 17. Most of the block walls in this area have rebar dowels from the footing, but are not filled solid with concrete.

Conclusion

Based on the noted condition, the following is our finding and recommendation:

1. All the anchor rods in place were rusted and lost some of the threads. They should be cut out and replaced with epoxy anchors.

2. All exposed rebars in the basement area and dowels above the foundation wall were rusted. Those existing rebars could be reused. However, they should be brushed clean prior to the construction of the new walls.

3. The attached drawing "AS-Built Foundation Plan" (Appendix II) indicates the existing footing and foundation wall have been constructed. The area marked in yellow shows the footing has been built. In general, the structural integrity of the foundation walls in place appears to be in sound condition. There is no crack on

the foundation observed during the site visits. The majority of the footings were bearing on crushed stone, soil or weathered shale, which appears to be sufficient to support the future loading. However, there are some locations of the existing footing due to water erosion, indicated in pink on the drawing, where the exterior side of those footing soil bearing capacity should be verified by a soil engineer.

4. All formwork on site at present should be replaced prior to casting new concrete.

5. The concrete block walls below grade should be filled solid with concrete. The contractor should remove all debris inside the existing block wall prior to filling solid with concrete at the location where it is still missing.

Appendix I

Photographs

Photo No. 1

Photo No. 2

Photo No. 3

Photo No. 4

Photo No. 5

Photo No. 6

Photo No. 7

Photo No. 8

Photo No. 9 (09-12-12)

Photo 10 (09-12-12)

Photo No. 11

Photo No. 12

Photo No. 13

Photo No. 14

Photo No. 15

Photo 16 (09-12-12)

Photo 17 (09-12-12)

Appendix II

As-Built Foundation Plans

CHECK BOTTOM OF FOOTING BEARING.
PORTION OF FOOTINGS CONSTRUCTED.

AS BUILT FOUNDATION PLAN
AS OF 09/ 2012

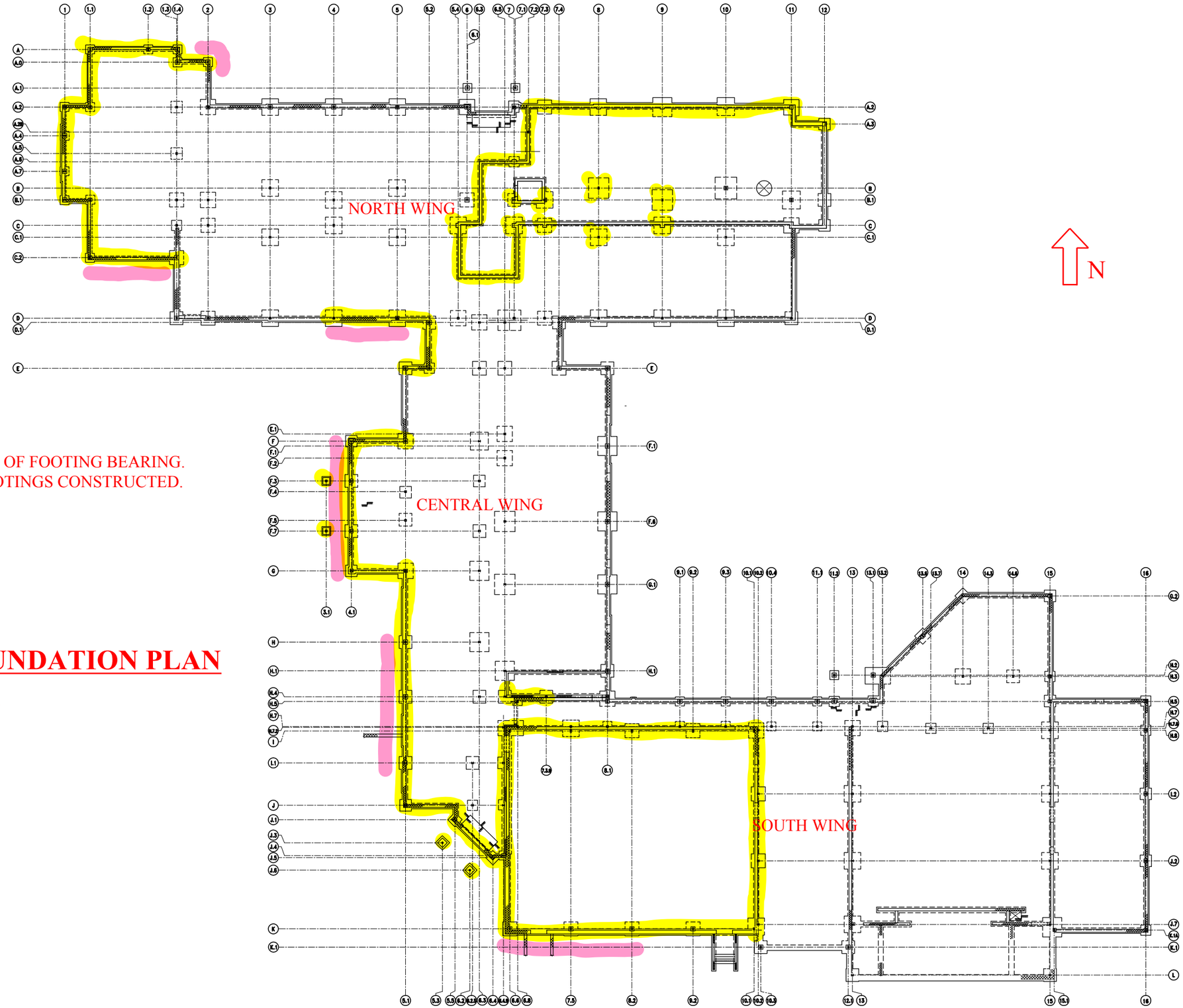

FOUNDATION PLAN